OPERATOR'S AND PARTS MANUAL

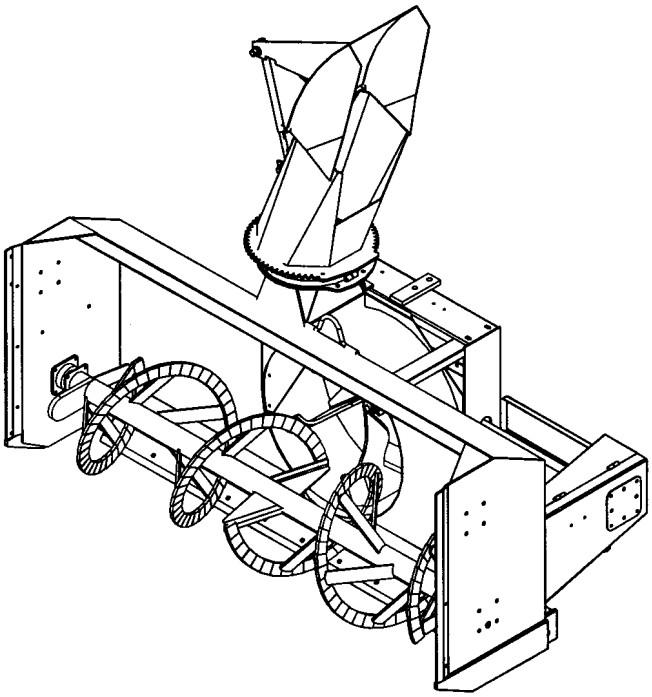

SNOWBLOWER
SA88 and SA88TRC MODELS

SERIAL NO. 2015193 AND UP

OM 0221-A
09/01

BER-VAC
by RAD Technologies Inc.

TABLE OF CONTENT

INTRODUCTION – TO THE PURCHASER 3

SAFETY PRECAUTIONS 4

- Before Operation 4
- Notice 5
- The Snowblower 5
  - Before Operation 5
  - Snowblower operation 6
- The Tractor 7
  - General Information 7
  - Operating the Tractor 7
  - During Operation 7
- Maintenance 8
- Transporting 8
- Storage 8

DECALS 9

ASSEMBLY 10

- Snowblower Assembly 10
  - Three Point Hitch Installation 10
  - Snowblower Installation 11
  - Driveline Installation 11
  - Detaching Snowblower from Tractor 11
  - Chute Installation 12
  - Hydraulic Rotation by Cylinder - 8171 13
  - Hydraulic Rotation by Motor - 8164 14
  - Gear and Pinion Adjustments 15
  - Second Auger Conversion – 9462 Option 15
  - Installation of the Reduction Box – 8097 Option 16
  - Adjustment and Maintenance of the Reduction Box 16
  - Installation of the Knives – Option 16

OPERATION 17

- General Preparation 17
- Operating Controls 17
  - Raising and Lowering the Snowblower 17
  - Drive Shaft Operation 17
  - Deflector Adjustment 17
  - Skid Shoes Adjustment 17
  - Work and Travel Speed 17
- Snow Removal Methods 18

TABLE OF CONTENT

MAINTENANCE 19
Maintenance 19
Storage 19
Lubrication 19

PARTS 20
Introduction 20
SA88 Snowblower 21
SA88TRC Snowblower 24
Three Point Hitch 27
Standard Chute – 665965 28
Semi-Industrial Chute – 8167 29
Industrial Chute – 8168 30
Hydraulic Rotation by Cylinder – 8171 31
Hydraulic Rotation by Motor – 8164 32
Second Auger conversion – 9462 33
Gearbox – 662195 34
Reduction Box – 8096 35
Driveline - 662538 36
Heavy Duty Driveline – 8030 37

WARRANTY 38

TORQUE SPECIFICATION TABLE 39

INTRODUCTION

TO THE PURCHASER

All BER-VAC and BLIZZARD products are designed to give safe, dependable service if they are operated and maintained according to instructions. **Read and understand this manual before operation.**

This manual has been prepared to assist the owner and operators in the safe operation and suitable maintenance of the implements. The information was applicable to products at the time of manufacture and does not include modifications made afterwards.

Read and understand this operator's manual before attempting to put an implement into service. Familiarize yourself with the operating instructions and all the safety recommendations contained in this manual and those labeled on the implements and on the tractor. Follow the safety recommendations and make sure that those with whom you work follow them.

Illustrations

The illustrations may not necessarily reproduce the full detail and the exact shape of the parts or depict the actual models, but are intended for reference only

Direction Reference

Right Hand and Left Hand are determined by those seen by the conductor looking at the machine while operating.

To assist your dealer in handling your needs, please record hereafter the model number and serial number of your implement and tractor. It is also advisable to supply them to your insurance company. It will be helpful in the event that an implement or tractor is lost or stolen.

MODEL : _____

SERIAL NUMBER : _____

DATE OF PURCHASE : _____

SAFETY PRECAUTIONS

SAFETY FIRST

This symbol, the industry's "Safety Alert Symbol", is used throughout this manual and on labels on the machine itself to warn of the possibility of personal injury. Read these instructions carefully. It is essential that you read the instructions and safety regulations before you attempt to assemble or use this unit.

DANGER : Indicates an immediately hazardous situation which, if not avoided, will result in death or serious injury.

WARNING : Indicates a potentially hazardous situation which, if not avoided, could result in death or serious injury.

CAUTION : Indicates a potentially hazardous situation which, if not avoided, may result in minor or moderate injury.

IMPORTANT : Indicates that equipment or property damage could result if instructions are not followed.

NOTE : Gives helpful information.

All products are designed to give safe, dependable service if they are operated and maintained according to instructions. **Read and understand this manual before operation**. It is the owner's responsibility to be certain anyone operating this product reads this manual., and all other applicable manuals, to become familiar with this equipment and all safety precautions. Failure to do so could result in serious personal injury or equipment damage. If you have any questions, consult your dealer.

BEFORE OPERATION

Children

Tragic accidents can occur if the operator is not alert to the presence of children. Children are generally attracted to machines and the work being done. Never assume children will remain where you last saw them.

1. Keep children out of the operating area and under the watchful eye of another responsible adult.
2. Be alert and turn machine off if children enter the work area.
3. Before and when backing, look behind and look for small children.
4. Never carry children while operating the machine. They may fall off and be seriously injured or interfere with safe operation of the machine.
5. Never allow children to play on the machine or attachment even when turned off.
6. Never allow children to operate the machine even under adult supervision.
7. Use extra care when approaching blind corners, shrubs, trees, or other obstructions that might hide children from sight.

NOTICE

A safe operator is the best insurance against accidents. All operators, no matter how experienced they may be, should read this Operator's Manual and all other related manuals before attempting to operate an implement. Please read the following section and pay particular attention to all safety recommendations contained in this manual and those labeled on the implements and on the tractor.

THE SNOWBLOWER

Before Operation

1. Read and understand this operator's manual and tractor operator's manual. Know how to operate all controls and how to stop the unit and disengage the controls quickly.

2. Never wear loose, torn, or bulky clothing around the tractor and implement. It may catch on moving parts or controls, leading to the risk of accident.

3. Before the snow season, thoroughly inspect the area where the equipment is to be used and remove all doormats, sleds, boards and other foreign objects.

4. Disengage clutch and shift into neutral before starting the engine.

5. Do not operate equipment in wintertime without wearing adequate winter garments.

6. Never attempt to make any adjustments while engine is running. Read this manual carefully to acquaint yourself with the equipment as well as the tractor operator's manual. Working with unfamiliar equipment can lead to accidents. Be thoroughly familiar with the controls and proper use of the equipment. Know how to stop the unit and disengage the controls quickly.

7. Keep all shields in place and properly tighten all mounting hardware.

8. Periodically, inspect all moving parts for wear and replace with authorized service parts if an excessive amount of wear is present.

9. Replace all missing, illegible, or damaged safety and warning decals. See list of decals in the operator's manual.

10. Do not modify or alter this equipment or any of its components, or any equipment function without first consulting your dealer.

11. Keep safety decals clean of dirt and grime.

Snowblower Operation

1. Before leaving the tractor unattended, take all possible precautions. Disengage the PTO, stop the engine and remove the ignition key. Lower the implement to the ground.
2. Before starting the snowblower, remove any ice that has accumulated in the auger/impeller.
3. Watch carefully for foreign objects that could enter the blower while operating.
4. Be sure the clutch switch/lever is in OFF position before starting engine.
5. Do not put hands or feet near rotation parts. Keep clear of discharge opening at all times.
6. Exercise extreme caution when operating on or crossing a gravel drive, walks, or roads. Stay alert for hidden hazards or traffic. Do not carry passengers.
7. Adjust collector housing height to clear gravel or crushed rock surface.
8. Stop the engine, remove the key, and allow the rotating parts to stop before unclogging the collector/impeller housing or chute, and making any repairs, adjustments or inspections. Use only a 36" long piece of wood to unclog blower.
9. If the snowblower starts to vibrate abnormally, stop the engine immediately and check for cause. Excessive vibration is generally a sign of trouble.
10. Do not run the engine indoors except when starting engine and transporting attachment in or out of building. Carbon monoxide gas is colorless, odorless and deadly.
11. Exercise extreme caution when changing direction on slopes. Do not attempt to operate on steep slopes.
12. Never operate snowblower without guards, and other safety protective devices in place.
13. Never operate snowblower near glass enclosures, automobiles, window wells, embankments, etc., without proper adjustment of snow discharge angle.
14. Never operate machine at high transport speeds on a slippery surface.
15. Use extra caution when backing up.
16. Do not direct discharge at bystanders or animals. Ejected objects may cause injury.
17. Disengage power to auger/impeller when transporting or when not in use.
18. Never operate the snowblower without good visibility and lighting.
19. Prolonged exposure to loud noise can cause impairment or loss of hearing. Wear a suitable hearing protective device such as earmuffs or earplugs to protect against objectionable or uncomfortable noises

THE TRACTOR

General Information

1. Read the operator's manual carefully before using tractor. Lack of operating knowledge can lead to accidents.
2. Do not permit anyone but the operator to ride on the tractor. There is no safe place for extra riders.

Operating the Tractor

1. Never run the tractor engine in a closed building without adequate ventilation, as the exhaust fumes are very dangerous.
2. Never allow an open flame near the fuel tank or battery.
3. Make sure the shield is installed when using a PTO-driven equipment and always replace the shield if damaged.
4. Always bring the tractor to a complete stop, shut off the engine, lower the implement to the ground and remove the ignition key before leaving the tractor.
5. Never park the tractor on a steep slope.
6. Do not attempt to operate on steep slopes.
7. Use of tire chains for better traction and stability is recommended.
8. Always drive the tractor at speeds compatible with safety, especially when operating over rough ground, crossing ditches, or when turning.
9. Handle fuel with care, as it is highly flammable.
10. Use approved fuel container.
11. Never add fuel to a running engine or a hot engine.
12. Fill fuel tank outdoors with extreme care. Never fill fuel tank indoors. Replace fuel cap securely and wipe up spilled fuel.
13. Never allow anyone to operate the snowblower until they are thoroughly familiar with basic tractor and snowblower operation.
14. Make sure the tractor is counterweighted as recommended by your dealer. Weights provide the necessary balance to prevent tip-over or loss of traction or steering.
15. Always make sure all snowblower components are properly installed and securely fastened BEFORE operation.

During Operation

1. Do not allow anyone to ride on the tractor/snowblower at any time. There is no safe place for passengers on this equipment. The operator MUST sit in the tractor seat.
2. Eye and hearing protection is recommended when operating the snowblower.
3. Operate only during daylight hours, or when the area is well lit with bright artificial light.
4. Disengage the PTO (turn to “OFF”), place the transmission in neutral, set the parking brake, shut off the engine and remove the key, and make sure rotating components have stopped BEFORE leaving the operator’s seat.
5. Inspect the snowblower after striking any foreign object to assure that all snowblower parts are safe and secure and not damaged.

MAINTENANCE

1. Park the tractor/snowblower on level ground, set the parking brake, disengage the PTO, shut off the engine, remove the key, and lower the implement to the ground BEFORE making any snowblower adjustments.
2. To avoid injury, do not adjust, unclog or service the snowblower with the tractor engine running. Making sure rotating components have completely stopped before leaving the operator's seat
3. Keep the tractor/snowblower clean. Snow and ice build-up can lead to malfunction or personal injury from thawing and refreezing in garage.
4. Always wear eye protection when cleaning or servicing the snowblower.
5. Do not work under any part of the tractor or snowblower, unless it is securely supported by safety stands.
6. Make sure all shields and guards are securely in place following all service, cleaning, or repair work.
7. Do not modify or alter this equipment or any of its components or operating functions. If you have questions concerning modifications, consult with your dealer.

TRANSPORTING

1. If the tractor/snowblower is to be driven on public roads, it must be equipped with an SMV (Slow Moving Vehicle) sign. Check local traffic codes that may apply to unit usage on public roads and highways in your area.
2. Be alert for all other traffic when driving the tractor/snowblower on public roads or highways.

STORAGE

Before storing the snowblower, certain pre-cautions should be taken to protect it from deterioration.

1. Clean the snowblower thoroughly.
2. Make all the necessary repairs.
3. Replace all Safety Signs that are damaged, lost, or otherwise become illegible. If a part to be replaced has a sign on it, obtain a new safety sign from your dealer and install it in the same place as on the removed part.
4. Repaint all parts from which paint has worn or peeled.
5. Lubricate the snowblower as instructed under **"Lubrication"** section.
6. When the snowblower is dry, oil all moving parts. Apply oil liberally to all surfaces to protect against rust.
7. Store in a dry place.

DECALS

Replace Immediately If Damaged.

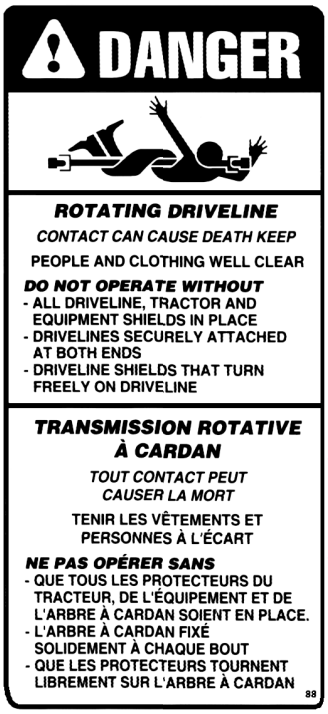

656781

656779

656780

2500316

660989

Included with Option 8171

664548

660988

SNOWBLOWER ASSEMBLY

The snowblower is assembled at the factory, however, snowblower kits must be assembled. Use the present manual and lay out all parts for assembly. Separate bolts and nuts into various sizes. After assembly, torque all the bolts according to the Torque Specification Table enclosed at the end of the manual.

Three Point Hitch Installation
(Figure 1)

1. Install the lower left hitch and lower right hitch (items 1-2) on snowblower using two bolts 5/8" x 5", 3/4" lockwashers and 3/4" hex nuts (items 14-16-17).

2. Install the attaching plates (item 3) to the lower hitches (items 1-2) using the top holes. Secure with two 3/4'' NC x 2'' bolts and 3/4"stover nuts (items 11-18).

3. Fasten each attaching plate (item 3) to the upper hitch (item 4A for SA88 or 4B for SA88TRC) using a 3/4'' NC x 4 1/2"' bolt and a 3/4" stover nut (items 9-18).

4. Attach upper hitch (item 4A for SA88 or 4B for SA88TRC) to the snowblower attaching plate (not illustrated) using two 3/4'' NC x 2 1/2'' bolts, 3/4" lockwashers and 3/4" hex. nuts (item 10-12-13).

5. Install the brace (item 6) on the lower hitches (items 1-2) using two 5/8'' NC x 4 1/2'' bolts lockwashers and nuts (items 15-16-17) inserting them in the holes closest to the attaching plates.

Note: We recommend using the driveline chain when storing the snowblower.

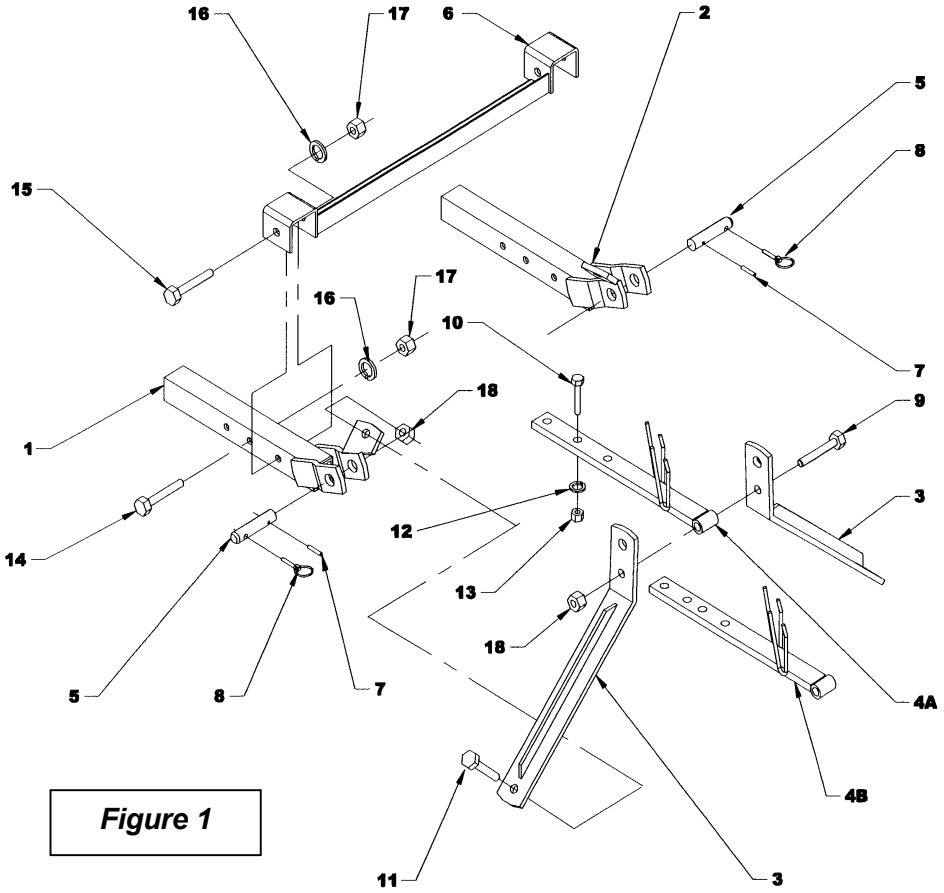

Figure 1

ASSEMBLY

Snowblower Installation

(Figure 1)

1. Attach tractor lower hitch arms to snowblower lower hitches (items 1-2) using the pins, the linchpins and roll pins (item 5-8-7).

2. Install the tractor upper hitch on the upper or lower hole of the snowblower attaching plates (item 3) using the tractor pins.

3. To level snowblower front to back, adjust using the tractor top link.

4. To level side to side, use leveling crank on right lower lift arm.

5. Set the tractor anti-sway turnbuckles so the snowblower does not sway. Be sure the turnbuckles clear the tractor tires.

WARNING: Before connecting snowblower driveline to tractor drive shaft, make sure driveline is not too long in raised, lowered or middle position. If the driveline is too long it must be shortened, to avoid damaged to tractor.

6. Connect driveline to tractor drive P.T.O., making sure the driveline is well secured to the tractor.

7. Secure driveline safety chain to tractor master shield to prevent driveline shield from rotating.

8. Before operating the snowblower, raise the parking stand from the ground.

Note: Depending on tractor used, it may be necessary to install front tractor weights to maintain front-end stability.

Driveline Installation

1. Remove paint from snowblower gearbox drive shaft and grease driveline sliding surfaces and yoke.

2. Remove the two bolts of the yoke and slide driveline yoke over drive shaft using sliding action of the driveline. Make sure the driveline is well secured to the drive shaft by replacing the two bolts and tightening them according to the torque specification table.

Detaching Snowblower from Tractor:

Select a level surface to detach. Lower the parking stand. Remove driveline from the tractor's PTO. Detach top link using adjustment as required. Detach right lower link using adjustable link to assist if necessary. Detach left lower link.

IMPORTANT: To avoid damage to the snowblower, retorque all bolts after the first 10 hours of operation.

Chute Installation (Figure 2a)

1. Place a rotation bushing (item 4) on the housing, placing the joint of the bushing in the middle of the welded support (item 3). Install the other rotation bushing as shown on Figure 2b.
2. Install the chute on the rotation bushing already in place on the housing. Make sure that the joints of both bushings are in the middle of the welded support (item 3) and push the chute all the way in the support (item 3).
3. Place the chute support (item 5) on the housing and insert two 1/2" x 3 1/4" bolts (item 9) to join the two supports. Push the chute support until you are able to insert the the 5/8" x 1 1/2" bolts (item 6), the 5/8" lockwashers (item 7) and the 5/8" nuts (item 8).

IMPORTANT: Tighten by hand only.

4. Install the 1/2" nylon nuts (item 10) on each side and tighten evenly until the chute cannot be turned by hand anymore. Then, unscrew the chute by hand enough to be able to turn the chute. Finally, tighten securely the 5/8" nuts (item 8).

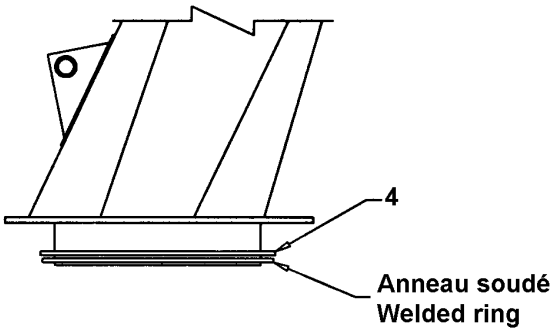

Figure 2b

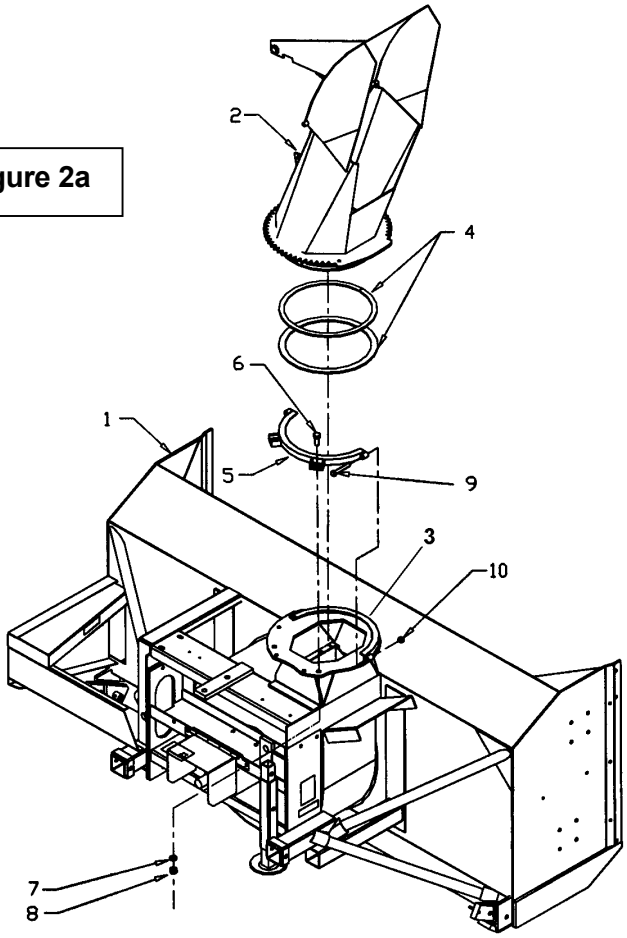

Figure 2a

Hydraulic Rotation by Cylinder 8171 (Figure 3)

1. Install bell crank bracket (item 4) under the base of the chute support at the centre of the machine by using two 1/2" NC x 1 3/4" hex. bolts (item 9). Tighten with two lockwashers and nuts (items 13-16).

2. Install the cylinder bracket (item 3) on the housing, attaching everything with two 1/2" NC x 1 3/4" bolts (item 9). Tighten with two lockwashers and nuts (items 13-16).

3. Insert a bushing (item 7) in the ∅1 1/4" hole of the bell crank (item 1) and slide the bell crank between the flat bars of the cylinder bracket. Slide a pivot bushing (item 6) under the cylinder bracket (item 3). Fasten everything by inserting a 3/4" NC x 4 1/2" bolt (item 8) through the ∅3/4" hole of the bell crank bracket (item 4) and tighten with a lockwasher and nut (items 12-15).

4. Fasten the push arm (item 2) in the ∅1/2" hole located on the chute gear, using a 1/2" x 3/4" shoulder screw (item 10) with the head of the screw upward. Place a spacer (item 5) between the push arm (item 2) and the gear and tighten with a 3/8" NC stover nut (item 14), leaving some movement to the articulation. Attach the other end by inserting a 1/2" x 3/4" shoulder screw (item 10) with the head over the chute base and tighten with a 7/16" flatwasher (item 11) and a 3/8" NC stover nut (item 14), leaving some movement to the articulation.

IMPORTANT: To prevent premature wear, grease generously the mobile parts.

Figure 3

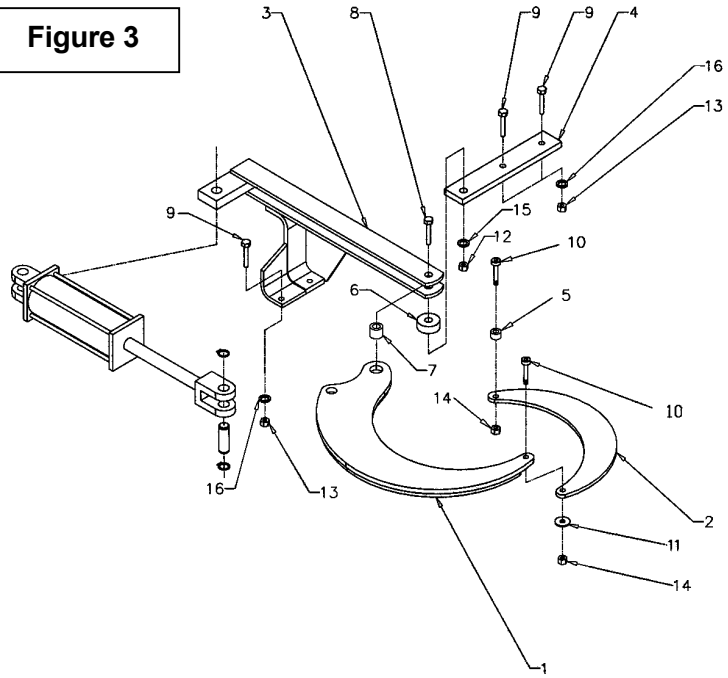

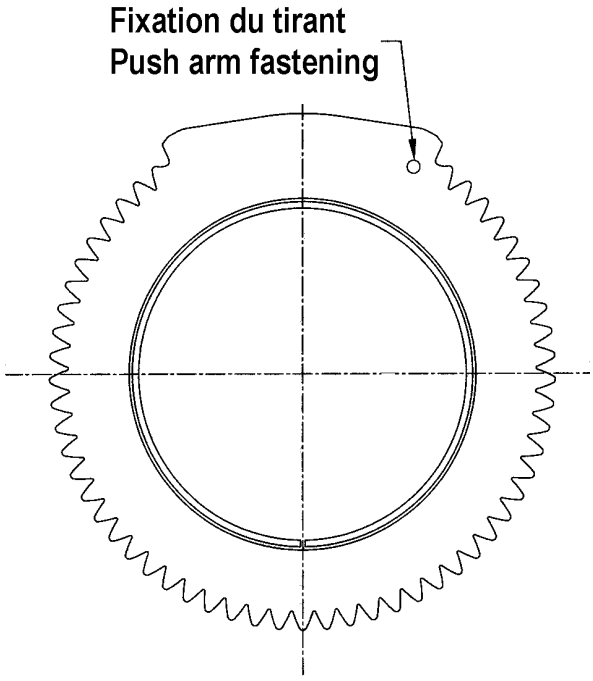

Hydraulic Rotation by Motor - 8164
(Figure 4)

1. Fasten the motor (item 5) using four 3/8'' x 3/4'' bolts, lockwashers (item 9-16). Tighten according to the Torque Specification Table.
2. Place the motor gear (item 1) on top of the motor, with hub facing down. Fasten the gear in place with a 1/4 " NC x 5/8" bolt and a 1/4" lockwasher (item 11-18). Tighten firmly.
3. Install the motor support (item 2) on the backside of the chute base, secure with two 3/8'' x 1 1/4'' bolts, 7/16" flatwashers, lockwashers and nuts (items 8-20-16-13). Do not tighten immediately.
4. Attach the upper part of the support with two 1/2" x 3" bolts, two 9/16" flatwashers, spacers, lockwashers and nuts (items 7-19-3-15-12). Do not tighten immediately.
5. Adjust the motor gear (item 1) and the chute gear, leaving play so that they run together smoothly.
6. Grease regularly the gears to prevent premature wear and rust on contact points.

Figure 4

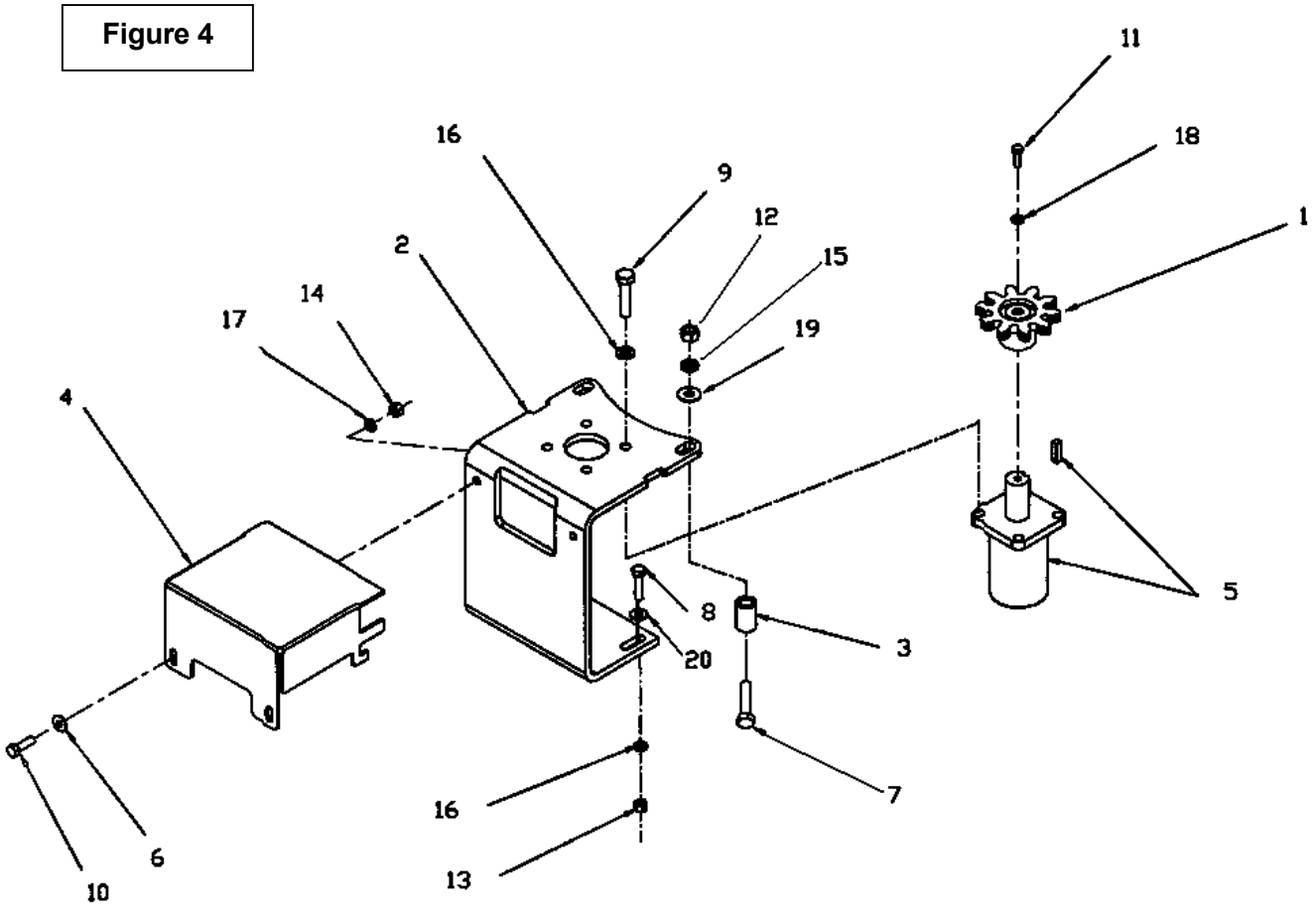

Gear and Pinion Adjustments
(Figure 4)

1. Correct mounting of the system will level the gears.

2. Adjust the gears with a distance of 1/32'' to 1/16''. Tighten the four nuts (item 12-13). Tighten firmly.

3. Connect the hydraulic hoses to the motor, and make a trial test at a very low speed.

4. Evaluate the adjustment according to the sound of the teeth. If they produce a loud noise when making contact, it means that the pinion and gear need to be closer. Readjust and repeat the operation until you hear a regular and even sound.

5. Install the shield (item 4) on the motor support (item 2) and secure using two 5/16" x 1" bolts, 5/16" flatwashers and nuts (items 10-6-17-14). Tighten securely.

Second Auger Conversion Kit 9462 (Option) **(Figure 5)**

1. Remove the front guard and loosen the idler sprocket. Remove the lower auger chain and the bolts on each side of the lower auger bearings. Remove the auger from the snowblower.

2. Install the new sprockets on both augers.

3. Reinstall lower and upper augers with the bolts and bearings supplied. Do not tighten setscrews on the bearings now.

4. Install idler sprocket (item 7) on chain idler support (item 3) as shown. Assemble support inside snowblower in the pre-bored holes.

5. Install the chain (item 5) as shown on figure 5. Align the auger's sprockets with the idler sprocket and tighten securely the setscrews on the auger bearings to stabilize the augers.

6. Install the new chain guard (item 2) supplied with the optional upper auger. Reinstall the lower auger chain and the front guard.

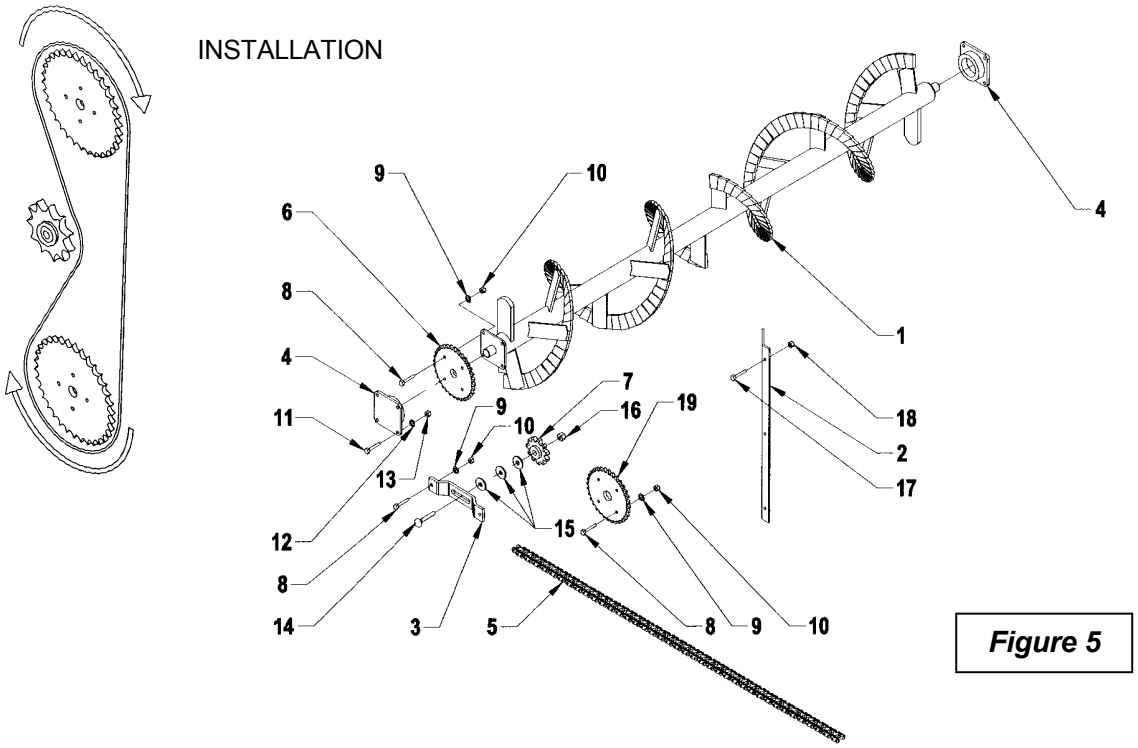

Figure 5

Installation of Reduction Box 8097 (Option) (Figure 6)

1. Remove the driveline from the snowblower. Remove the driveline guard (item 1) and attach the reduction box (item 6) to the support (item 2) with four 1/2" NC x 1 1/4" hex. bolts and lockwashers (items 3-4). Tighten firmly.
2. Slip the reduction box (item 6) on the gearbox splined shaft of the snowblower and align the holes of the support (item 2) with those of the snowblower. Fasten everything with four 1/2" NC x 1 1/4" hex. bolts, lockwashers and nuts (items 3-4-5). Tighten firmly.

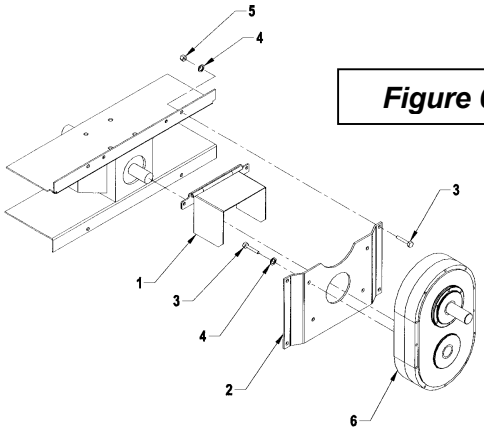

Figure 6

Adjustment and Maintenance of the Reduction box (Figure 6 – 7)

1. Replace the driveline shear bolt (fig. 7, item 11) with a M10 x 60 bolt grade 6.6 (663149) for 6-series and a M12 x 75 bolt grade 8.8 (664570) for 8-series, available at your local dealer.

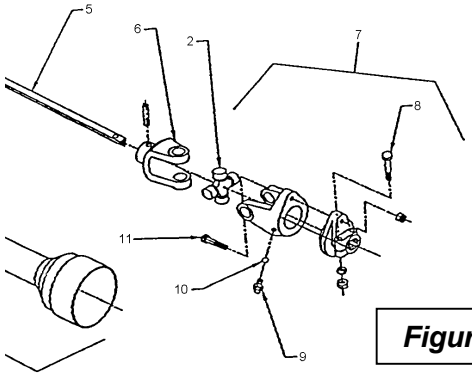

Figure 7

2. Adjust the chain's tension after ten (10) hours of operation. To do so, check the play between the reduction box input shaft (Fig.6, item 6) and the output shaft by turning the input shaft both ways without the output shaft turning. A play of 10° or 15° requires an adjustment:

   a. Remove the driveline from the reduction box.

   b. Remove the 12 5/16" bolts from the covers around the input shaft on each side (6 bolts on each side). **Note:** These 2 covers have an eccentric center in relation to the exterior – by turning them, we change the center to center of the shafts and tighten the chain.

   c. Using a hammer or a screwdriver, slowly turn the two covers in the same direction until the next cover hole is aligned with the threaded hole of the reduction box.

   d. Check the play between the 2 shafts, as described at point (2.). If the play is still too high repeat step (c.). If the play is correct, reinstall the bolts and the driveline.

   e. Check the play every 100 hours of operation.

3. After 25 hours of operation and before every season, change the oil from the reduction box with 2.6 liters of SAE 80W90 oil, AGMA 5EP oil or equivalent.

Installation of the Knives (Option) (Figure 8)

1. Enlarge the top and bottom holes on each side of the snowblower to ∅1/2". Install the knives (item 1) on the exterior of each snowblower side (item 5) by aligning the top and bottom holes and fasten with the plow bolts, lockwashers and nuts (item 2-3-4).
2. Using the knives as templates, drill the four missing holes and fasten as indicated in step 1.

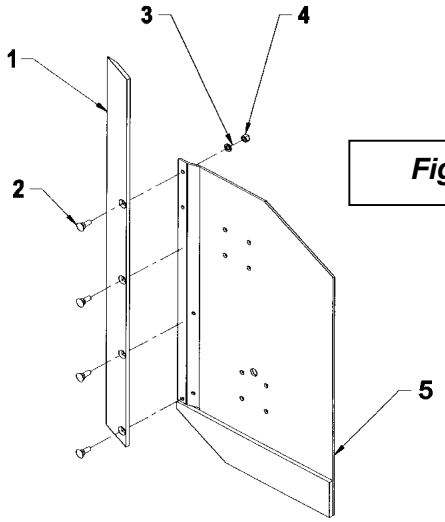

Figure 8

OPERATION

GENERAL PREPARATION

1. Read the operator's manual carefully before using the tractor and snowblower. Be thoroughly familiar with the controls and proper use of the equipment. Know how to stop the unit and disengage the controls quickly.

2. Make sure the snowblower is clear of snow before engaging the driveline.

3. Make sure the auger and fan operate freely.

4. Check the oil level in the worm gear box and if necessary, add SAE 80W90 gear oil, AGMA 5EP oil or equivalent.

5. Check the three shear bolts, one on each auger section and one between the fan and gearbox for proper tightness.

6. Adjust so that the snowblower skid shoes run level.

7. Wear adequate winter outer garments while operating equipment.

OPERATING CONTROLS

Deflector Adjustment

Set the angle of deflection according to the distance the snow must be thrown. To set the deflector angle, remove the hairpin from the adjustment tube, adjust the deflector to the appropriate angle and replace the hairpin.

Raising and Lowering the Snowblower

Move the three point lever down or forward to lower, and up or rearward to raise.

Work and Travel Speed

Working ground speed will depend on the depth and density of the snow to be cleared. Normally, ground speed will range from 4 to 7 MPH for light, dry snowfalls 3 to 6 inches, and 1 to 3 MPH for heavy, wet or drifted snow. To transport, disengage the drive shaft and raise the snowblower to full transport height.

WARNING: To avoid personal injury, be sure the tractor engine is off, the drive shaft disengaged, and all movement has stopped before making any adjustments.

Drive Shaft Operation

The mid drive shaft is activated by pulling up the drive shaft lever on left side of seat. Push down to disengage.

Skid Shoes Adjustment

Adjust the snowblower so that the skid shoes run level. Adjust the skid shoes according to the surface conditions so that stones are not thrown with the snow, and adjust upwards for smooth surfaces. Adjust both skid shoes to the same height to keep the cutting edge level.

To adjust skid shoes, loosen the bolts or remove the pin, and make the following adjustments:

Clearance between cutting edge and surface:

- *Level paved surface :* Adjust to 1/16" to 1/8"
- *Uneven or gravel surface:* Adjust to 1/2" and more according to size of gravel.

SNOW REMOVAL METHODS

When removing snow, do not use the snowblower as a dozer blade to push snow. Let the snowblower work its way through deep drifts. If the speed of your tractor is too fast, the snowblower may become overloaded and clog. For best results, raise the snowblower and remove a top layer of snow. A second pass with the snowblower will remove the remaining snow.

IMPORTANT : Use full RPM power when removing wet, sticky snow. Low RPM power will tend to clog the chute.

WARNING: Do not use hands or feet to unclog chute. Do not attempt to clear clogged chute of snow while tractor engine is running. If the chute clogs, disengage the drive shaft, shut off the tractor engine, remove the ignition key, wait for all movement to stop, and then clear the snow from the chute.

A definite pattern of operation is required to thoroughly clean the snow area. These patterns will avoid throwing snow in unwanted places as well as eliminating a second removal of snow

PATTERN 1

DISCHARGE SNOW BOTH SIDES

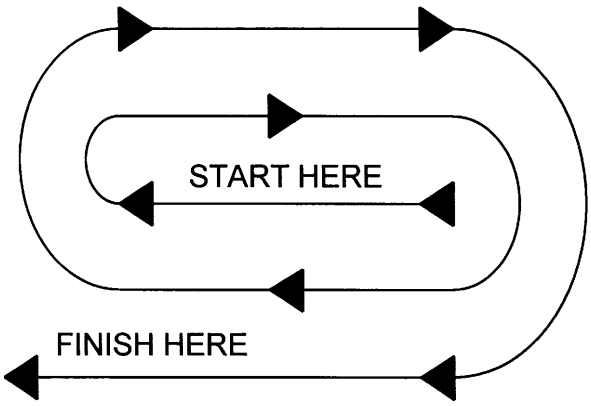

Where it is possible to throw the snow to the left and right (above), as on a long driveway, it is advantageous to start in the middle. Plow from one end to the other, throwing snow to both sides without changing the direction of the discharge guide

PATTERN 2

DISCHARGE SNOW THIS SIDE ONLY

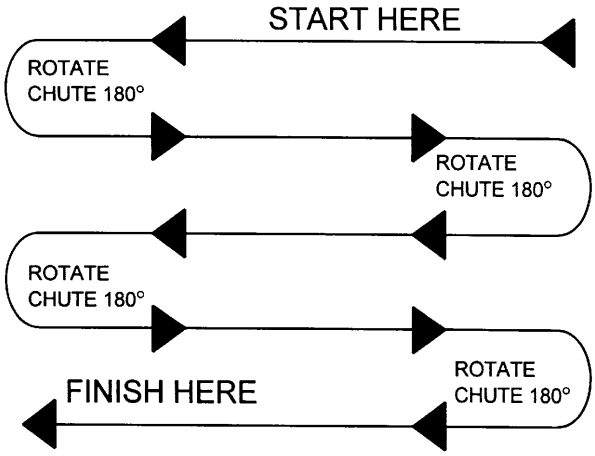

If the snow can only be thrown to one side of the driveway or sidewalk (above), start on the opposite side. At the end of the first pass, rotate the discharge guide 180 degrees for the return pass. At the end of each succeeding pass, rotate the discharge guide 180 degrees to maintain direction of throw in the same area.

MAINTENANCE

Storage

1. Check the shear bolts at frequent intervals for proper tightness to be sure the blower is in safe working condition.

2. Never store the tractor with fuel in the fuel tank inside a building where open flame or sparks are present. Allow the engine to cool before storing in any enclosure.

3. Run the snowblower a few minutes after blowing snow to prevent freeze up of the auger and the impeller.

WARNING: Provide adequate blocking before working under the snowblower when in the raised position.

Driveline

IMPORTANT: When the snowblower is not used for more than two weeks, perform driveline maintenance and always store it in a dry place, away from bad weather conditions.

LUBRICATION

1. **GEAR** : Check the oil level in the worm gear drive every month. If necessary add SAE 80W90 gear oil, AGMA 5EP extreme pressure oil or equivalent.

2. **REDUCTION BY CHAIN** : Lubricate with chain saw lubricant every 4 hours of operation and after each use.

3. **ROTATION SYSTEM** : Grease the chute base, the pivots and the gears every 8 hours of operation and when storing.

4. **DRIVELINE (S)** : Grease each u-joint fitting every 8 hours of operation. Slide drive shaft apart and coat sliding surfaces with grease every 8 hours of operation.

5. **DOUBLE CHAIN IDLER SECTIONS:** Grease the areas of the mechanism that have a grease fitting every 24 hours.

6. **ROTARY DRUM – SA88TRC** : Grease all rotation point every 24 hours of operation. At the end of the season, clean thoroughly the contour of the drum that comes in contact with the snowblower housing and grease generously before storing.

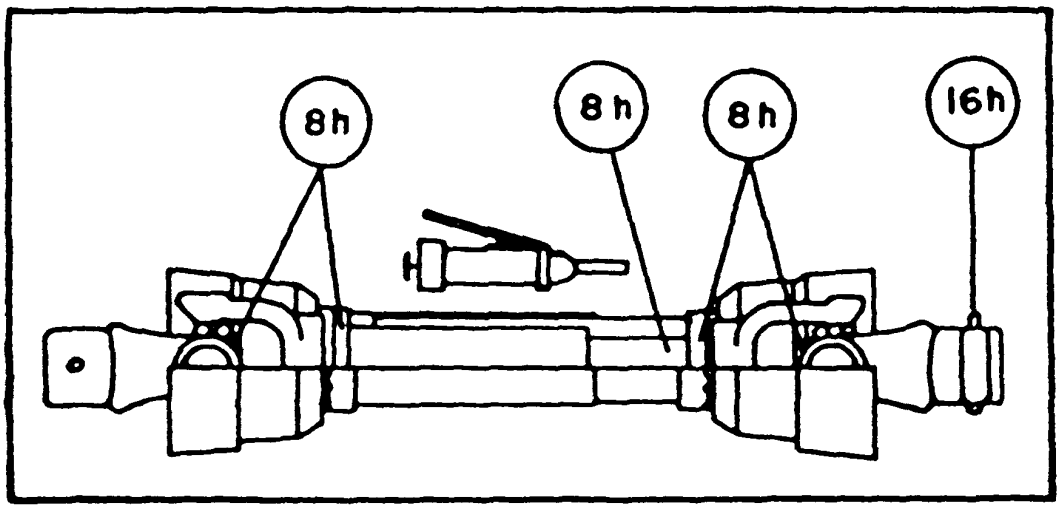

PARTS

INTRODUCTION

All parts are illustrated in "exploded views" which show the individual parts in their normal relationship to each other. Reference numbers are used in the illustrations. These numbers correspond to those in the "Reference Number" (REF) column, and are followed by the description and quantity required.

O/L - "Obtain Locally" in the part number column indicates common hardware that is available at your local hardware supply.

"Right Hand" and "Left Hand" sides of the machine are determined by those seen by the conductor looking at the machine while operating.

Orders must give the complete description, correct part number, the total amount required, the serial number, the method of shipment and the shipping address.

Your dealer reserves the right to change, modify, or eliminate from time to time, for technical or other reasons, certain or all data, specifications, or the product or products themselves, without any liability or obligation.

SA88 SNOWBLOWER

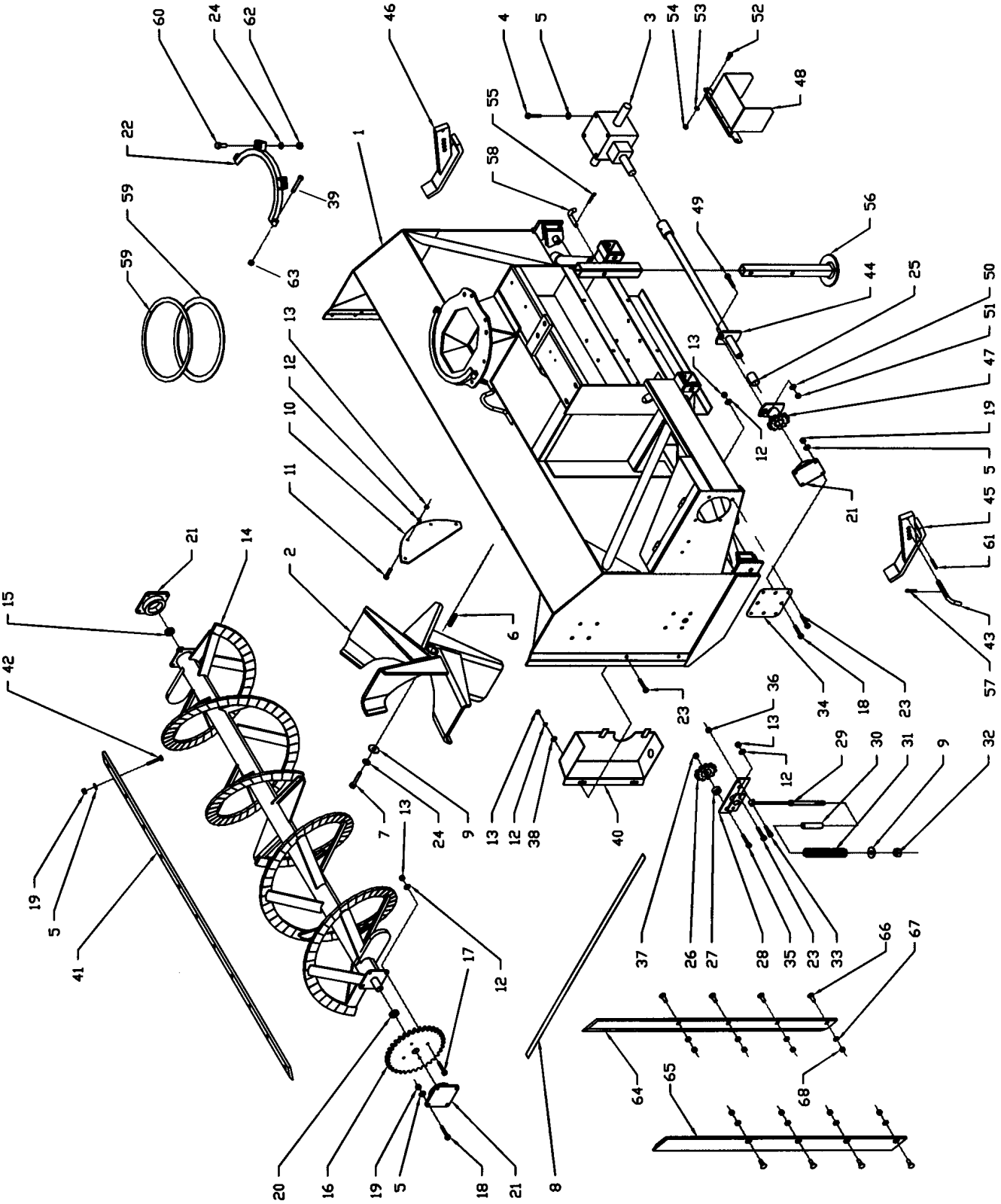

SA88 SNOWBLOWER

REF.	DESCRIPTION	QTY	PART NUMBER
1	Housing	---	---
2	Fan	1	662240
3	Gear box assembled	1	662195
4	Hex. bolt. 1/2" NC x 1"	8	O/L
5	Lockwasher 1/2"	31	O/L
6	Key 3/8" x 3/8" x 2 3/4" lg	1	654174
7	Hex. bolt 5/8" NC x 2 "	1	O/L
8	Chain # 80 HC x 81 links	1	659093
9	Flatwasher 11/16" dia. hole	2	O/L
10	Restriction plate	1	662301
11	Carriage bolt 3/8" NC x 1"	4	O/L
12	Lockwasher 3/8"	16	O/L
13	Hex. nut 3/8" NC	16	O/L
14	Auger	1	662239
15	Bushing	1	655812
16	Sprocket 1 1/4" hole dia.	1	655958
17	Hex. bolt 3/8" NC x 1 1/4"	4	O/L
18	Hex. bolt 1/2" NC x 1 1/2"	12	O/L
19	Hex. nut 1/2" NC	23	O/L
20	Spacer	1	663664
21	Bearing 1 1/4" dia. hole	3	4300001
22	Chute support	1	665961
23	Hex. bolt 3/8" NC x 1"	6	O/L
24	Lockwasher 5/8"	3	O/L
25	Bushing	2	655437
26	Idler sprocket	2	654756
27	Idler bushing	2	662046
28	Double chain idler	1	664825
29	Idler lever	1	664840
30	Spring guide	1	664841
31	Compression spring	1	664876
32	Stover 5/8" NC	1	O/L
33	Shoulder screw 1/2" x 3/4", 3/8" NC	1	664577
34	Drive support	1	662687
35	Hex. bolt 3/4" NC x 2 1/4"	2	O/L
36	Stover nut 3/8" NC	1	O/L
37	Stover nut 3/4" NC	2	O/L
38	Flatwasher Ø7/16"	2	O/L
39	Bolt hex. 1/2" NC x 3 1/4"	2	O/L
40	Front guard	1	664880
41	Cutting edge	1	662249
42	Carriage bolt 1/2" NC x 1 1/2"	11	O/L
43	Skid shoe pin	2	662400

SA88 - SNOWBLOWER

REF.	DESCRIPTION	QTY	PART NUMBER
44	Drive shaft	1	661614
45	Left skid shoe	1	662250
46	Right skid shoe	1	662251
47	Shear plate	1	655960
48	Driveline guard	1	663675
49	Hex. bolt 5/16" NC x 2" GR. 5	1	O/L
50	Lockwasher 5/16"	1	O/L
51	Hex. nut 5/16" NC	1	O/L
52	Hex. bolt 7/16" NC x 1"	2	O/L
53	Lockwasher 7/16"	2	O/L
54	Hex. nut 7/16" NC	2	O/L
55	Hairpin 4mm x 80mm lg.	1	O/L
56	Parking stand	1	662252
57	Hairpin Ø3/16" x 3 3/4"	2	O/L
58	Pin 5/8" dia. x 5 1/16" lg	1	30767
59	Rotation bushing 1/4" x 3/4"	2	665962
60	Bolt hex. 5/8" NC x 1 1/2"	2	O/L
61	Roll pin 3/8" x 2"	2	O/L
62	Nut hex. 5/8" NC	2	O/L
63	Nylon hex. nut 1/2" NC	2	O/L
	OPTIONAL		
64	Right vertical knife	1	664906
65	Left vertical knife	1	664905
66	Plow bolts 1/2" NC x 1 1/2"	8	O/L
67	Lockwasher 1/2"	8	O/L
68	Hex. nut 1/2" NC	8	O/L

SA88TRC - SNOWBLOWER

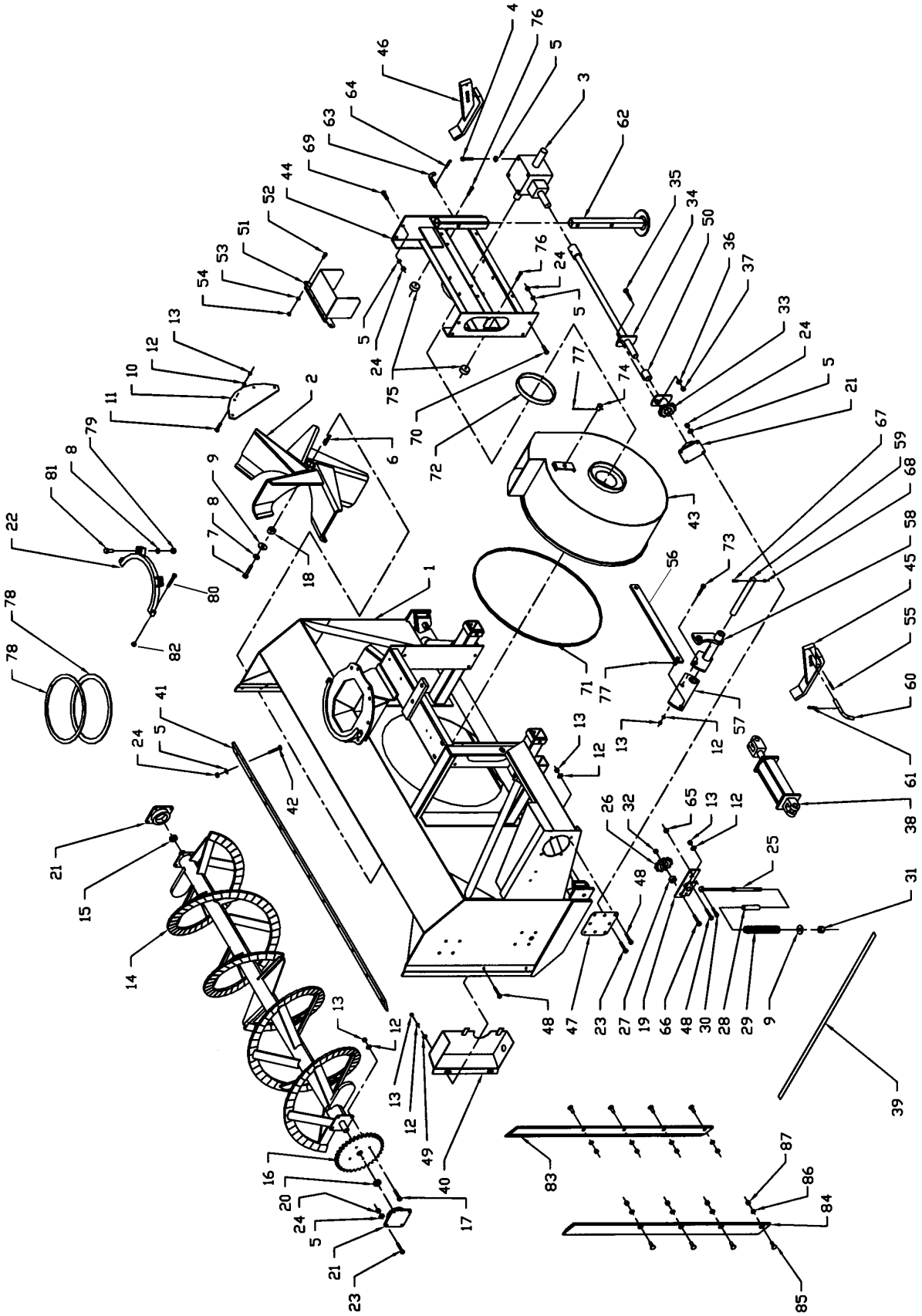

SA88TRC - SNOWBLOWER

REF.	DESCRIPTION	QTY	PART NUMBER
1	Housing	---	-------
2	Fan	1	662240
3	Gear box assembled	1	662195
4	Hex. bolt 1/2" NC x 1"	8	O/L
5	Lockwasher 1/2"	39	O/L
6	Key 3/8" x 3/8" x 2 3/4" lg	1	654174
7	Hex. bolt 5/8" NC x 2 3/4"	1	O/L
8	Lockwasher 5/8"	3	O/L
9	Flatwasher 11/16" dia. hole	2	O/L
10	Restriction plate	1	662301
11	Carriage bolt 3/8" NC x 1"	4	O/L
12	Lockwasehr 3/8"	17	O/L
13	Hex. nut 3/8" NC	17	O/L
14	Auger	1	662239
15	Bushing	1	655812
16	Sprocket 1 1/4" dia. hole	1	655958
17	Hex. bolt 3/8" NC x 1 1/4"	4	O/L
18	Fan bushing	1	662352
19	Double chain idler	1	664825
20	Bushing	1	663664
21	Bearing 1 1/4" dia. hole	3	4300001
22	Chute support	1	665961
23	Hex. bolt 1/2" NC x 1 1/2"	12	O/L
24	Hex. nut 1/2"	31	O/L
25	Idler lever	1	664840
26	Idler sprocket	2	654756
27	Bushing	2	662046
28	Spring guide	1	664841
29	Compression spring	1	664876
30	Shoulder screw 1/2" x 3/4", 3/8" NC	1	664577
31	Sover nut 5/8"	1	O/L
32	Stover nut 3/4" NC	2	O/L
33	Shear plate	1	655960
34	Drive shaft	1	661614
35	Hex. bolt 5/16" NC x 2" GR.5	1	O/L
36	Lockwasher 5/16"	1	O/L
37	Hex. nut 5/16" NC	1	O/L
38	Cylinder	1	654129
39	Chain #80 HC x 82 links	1	662260
40	Front guard	1	664880
41	Cutting edge	1	662249
42	Carriage bolt 1/2" NC x 1 1/2"	11	O/L
43	Rotary drum	1	662241
44	Rear drawer	1	662237

SA88TRC - SNOWBLOWER

REF.	DESCRIPTION	QTY	PART NUMBER
45	Left skid shoe	1	662250
46	Right skid shoe	1	662251
47	Drive support	1	662687
48	Hex. bolt 3/8" NC x 1"	8	O/L
49	Flatwasher ∅7/16"	2	O/L
50	Bushing	2	655437
51	Diveline guard	1	663675
52	Hex. bolt 7/16" NC x 1"	2	O/L
53	Flatwasher 7/16"	2	O/L
54	Hex. bolt7/16" NC	2	O/L
55	Roll pin 3/8" x 2"	2	O/L
56	Rotation plate - drum	1	662247
57	Rotation arm - drum	1	662246
58	Rotation lever – drum	1	662245
59	Rotation rod - drum	1	659020
60	Pin 5/8" dia.x 6 13/16" lg	2	662400
61	Hairpin 3/16" dia. x 3 3/4" lg.	2	O/L
62	Parking stand	1	662252
63	Pin 5/8" dia.x 5 1/16" lg	1	30767
64	Hairpin 4mm x 80mm lg.	1	O/L
65	Hex. nut 3/8" NC stover	1	O/L
66	Hex. bolt 3/4" NC x 2 1/4""	2	O/L
67	Hex. bolt 5/16" NC x 2 1/4"	1	O/L
68	Hex. nut 5/16" NC - stover	1	O/L
69	Hex. bolt 1/2" NC x 1 1/4"	4	O/L
70	Hex. bolt 1/2" x 1 3/4"	4	O/L
71	Anti-friction strip "UHMW" 3/8" x 1/2"	1	661989
72	Anti-friction strip "UHMW" 3/8" x 1"	1	661988
73	Bolt hex. 3/8" NC x 2"	1	O/L
74	Pin 3/4" dia. x 1 3/16"	1	662248
75	Rotary drum stopper	2	659078
76	Tapping screw 3/8" x 1"	2	659079
77	Hairpin 3/16" dia. x 1 1/2"	2	O/L
78	Upper rotation bushing 1/4" x 3/4"	2	665962
79	Nut hex. 5/8" NC	2	O/L
80	Bolt hex. 1/2" x 3 1/4"	2	O/L
81	Bolt hex. 5/8" NC x 1 1/2"	2	O/L
82	Nylon hex. nut 1/2" NC	2	O/L
	OPTIONAL		
82	Right vertical knife	1	664906
83	Left vertical knife	1	664905
84	Plow bolt 1/2" NC x 1 1/2"	8	O/L
85	Lockwasher 1/2"	8	O/L
86	Hex. nut 1/2" NC	8	O/L

THREE POINT HITCH

REF.	DESCRIPTION	QTY.	PART NUMBER
1	Left lower hitch	1	662253
2	Right lower hitch	1	662254
3	Attaching plate	2	662256
4A	Upper hitch – SA 88	1	662255
4B	Upper hitch – SA 88TRC	1	664380
5	Pin CAT. 2	2	655813
6	Brace	1	664381
7	Roller pin 1/4" dia. x 1 3/4" lg.	2	O/L
8	Linchpin 7/16" dia.	2	O/L
9	Hex. bolt 3/4" NC x 4"	1	O/L
10	Hex. bolt 3/4" NC x 2 1/2"	2	O/L
11	Hex. bolt 3/4" NC x 2"	2	O/L
12	Lockwasher 3/4"	2	O/L
13	Hex. nut 3/4" NC	2	O/L
14	Hex. bolt 5/8" NC x 5"	2	O/L
15	Hex. bolt 5/8" NC x 4 1/2"	2	O/L
16	Lockwasher 5/8"	4	O/L
17	Hex. nut 5/8" NC	4	O/L
18	Stover nut 3/4" NC	3	O/L

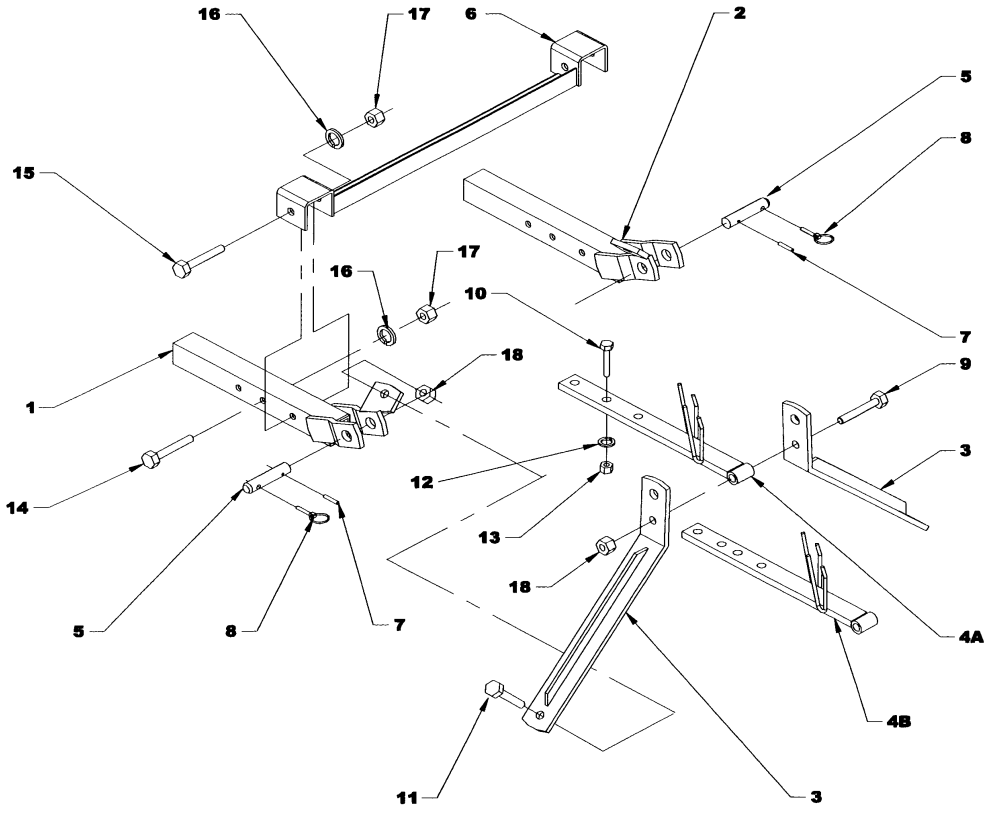

STANDARD CHUTE – 665965

REF.	DESCRIPTION	QTY.	PART NUMBER
1	Chute base	1	665958
2	Adjustable deflector	1	662624
3	Hinge pin	1	654075
4	Cotter pin 3/32" x 1" lg.	1	O/L
	OPTIONAL		
5	Adjustment tube	1	654076
6	Adjustment rod	1	654074
7	Hairpin 5mm dia. x 100 mm	1	O/L
8	Cotter pin 1/4" dia. x 2"	2	O/L

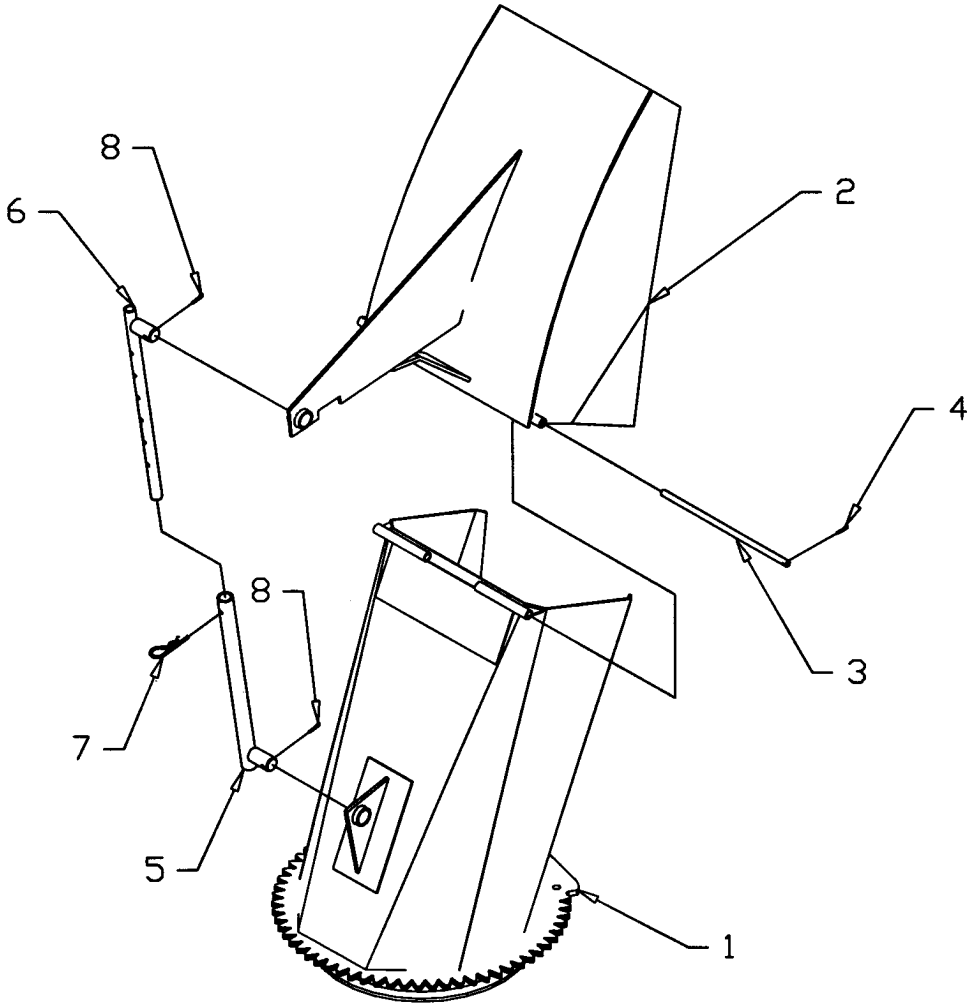

SEMI-INDUSTRIAL CHUTE – 8167

REF.	DESCRIPTION	QTY.	PART NUMBER
1	Deflector	1	662652
2	Central deflector	1	662651
3	Chute base	1	665676
4	Upper hinge rod	1	662654
5	Lower hinge rod	1	662625
6	Adjustment rod	1	662653
7	Cotter pin 1/8" dia. X 1"	6	O/L
8	Cotter pin 3/16" dia. x 1 1/2"	2	O/L
9	Adjustment arm	2	654895
10	Flatwasher 1/2" hole dia.	6	O/L

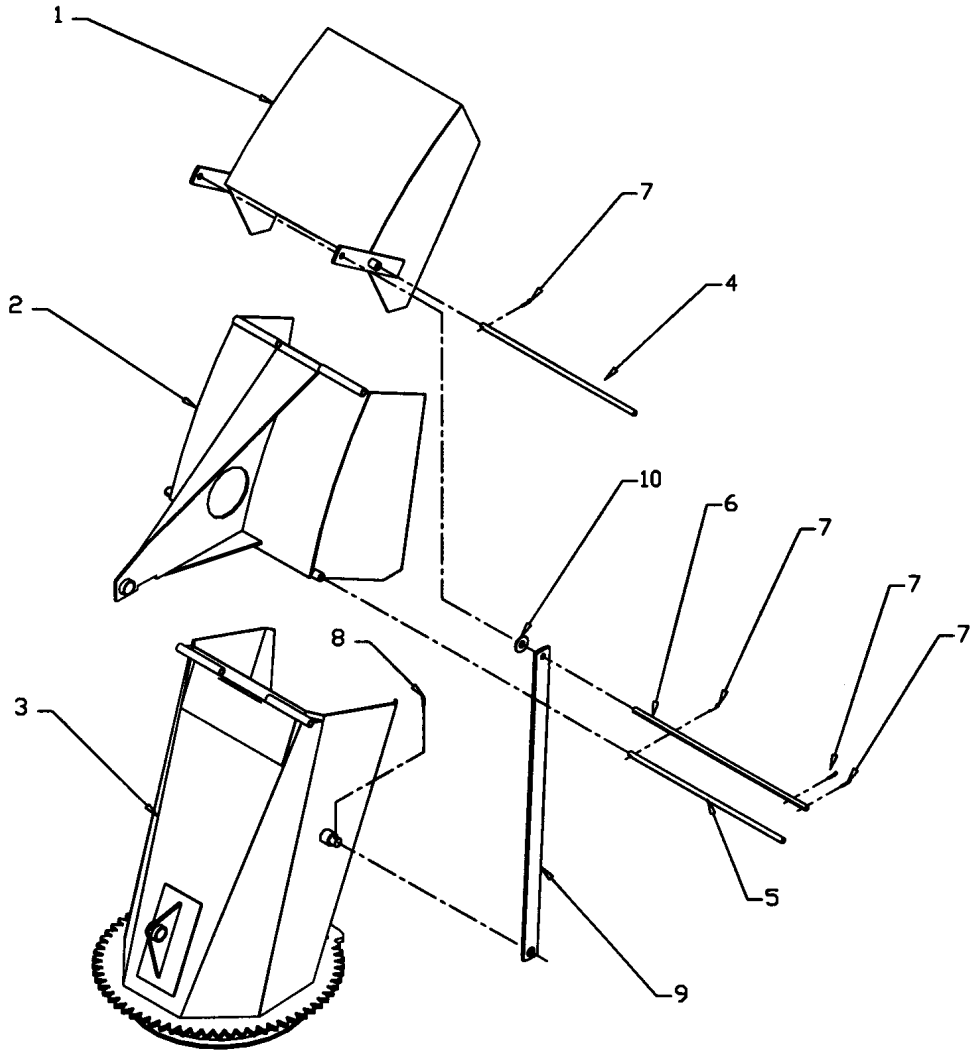

INDUSTRIAL CHUTE – 8168

REF.	DESCRIPTION	QTY.	PART NUMBER
1	Deflector	1	662652
2	Central deflector	1	662651
3	Chute base	1	662638
4	Upper hinge rod	1	662654
5	Lower hinge rod	1	662625
6	Adjustment rod	1	662653
7	Cotter pin 1/8" dia. x 1"	6	O/L
8	Cotter pin 3/16" dia. x 1 1/2"	2	O/L
9	Adjustment arm	2	654895
10	Flatwasher 1/2" hole dia.	6	O/L
11	Chute ring	1	665679
12	Retaining pin	2	664980
13	Hairpin 5mm dia.x 100mm	2	O/L
14	Roll Pin 1/4''dia. x 1 1/2''	2	O/L

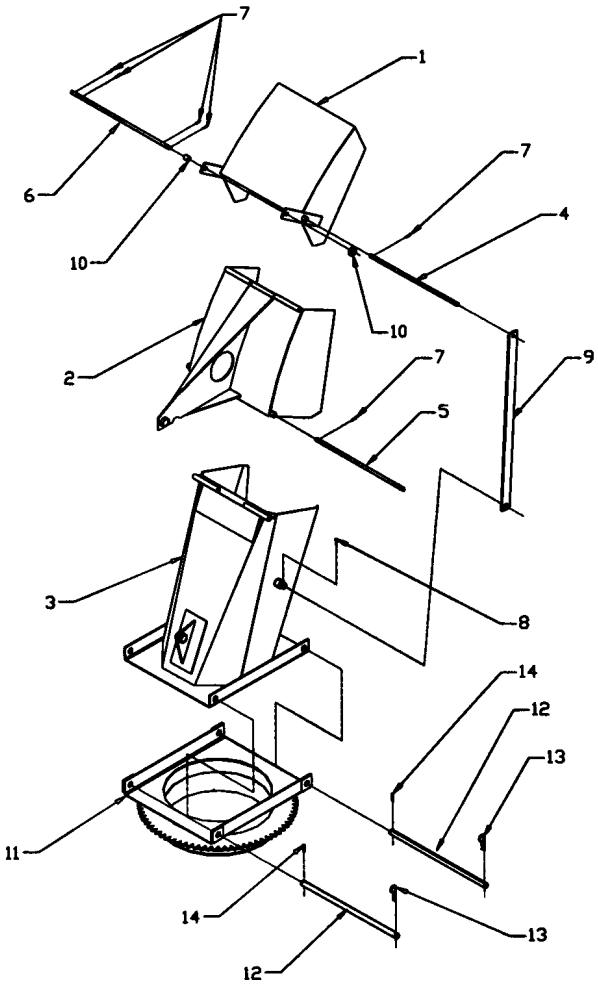

HYDRAULIC ROTATION BY CYLINDER – 8171

REF.	DESCRIPTION	QTY	PART NUMBER
1	Bell crank	1	664550
2	Push arm	1	664549
3	Cylinder bracket	1	664534
4	Bell crank bracket	1	664551
5	Pivot bushing	1	665732
6	Pivot bushing	1	665731
7	Bushing	1	664476
8	Hex. Bolt 3/4" NC x 4 1/2"	1	O/L
9	Hex. Bolt 1/2" NC x 1 3/4"	4	O/L
10	Shoulder screw 1/2" x 3/4"	2	664577
11	Flatwasher ∅7/16"	1	O/L
12	Hex. Nut 3/4" NC	1	O/L
13	Hex. Nut 1/2" NC	4	O/L
14	Stover nut 3/8" NC	2	O/L
15	Lockwasher 3/4"	1	O/L
16	Lockwasher 1/2"	4	O/L

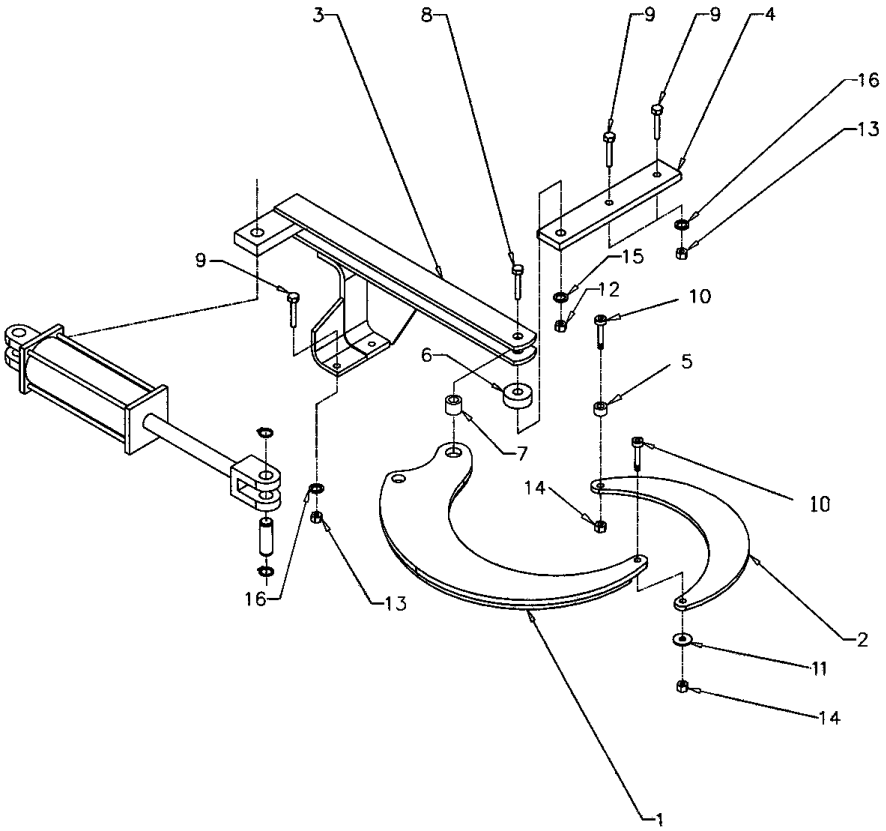

HYDRAULIC ROTATION BY MOTOR – 8164

REF.	DESCRIPTION	QTY.	PART NUMBER
1	Motor gear	1	665930
2	Motor support	1	665931
3	Spacer for motor support	2	665932
4	Shield	1	664839
5	Hydraulic motor	1	662448
	Seal kit	1	662449
6	Flatwasher Ø5/16"	2	O/L
7	Hex bolt 1/2" NC x 3"	2	O/L
8	Hex. bolt 3/8" NC x 1 1/4"	2	O/L
9	Hex. bolt 3/8"NC x 3/4"	4	O/L
10	Hex. bolt 5/16" NC x 1"	2	O/L
11	Hex. bolt 1/4" NC x 5/8"	1	O/L
12	Hex. nut 1/2" NC	2	O/L
13	Hex. nut 3/8" NC	2	O/L
14	Hex. nut 5/16" NC	2	O/L
15	Lockwasher 1/2"	2	O/L
16	Lockwasher 3/8"	6	O/L
17	Lockwasher 5/16"	2	O/L
18	Lockwasher 1/4"	2	O/L
19	Flatwasher 9/16" dia. hole	2	O/L
20	Flatwasher Ø7/16"	2	O/L
	OPTIONAL		
21	Cushion valve	1	664999
22	Hex. bolt 1/4" NC x 2"	2	O/L
23	Lockwasher 1/4"	2	O/L
24	Hex. nut 1/4" NC	2	O/L

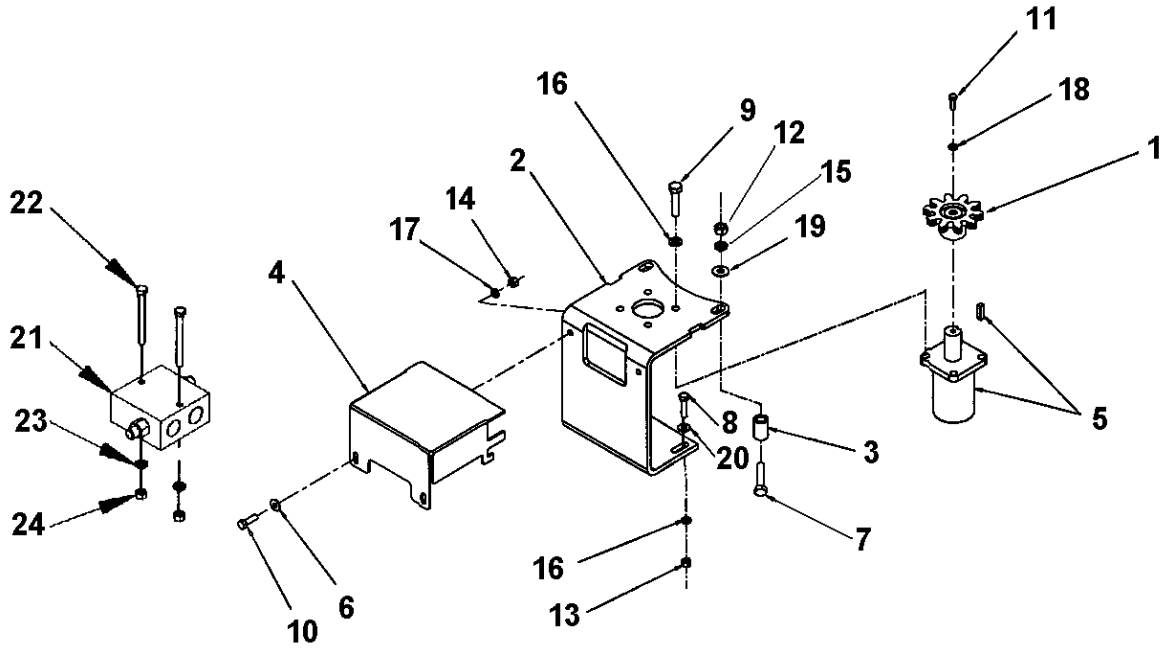

SECOND AUGER CONVERSION KIT - 9462

REF.	DESCRIPTION	QTY.	PART NUMBER
1	Upper auger	1	662310
2	Chain guard	1	662215
3	Chain idler support	1	655782
4	Bearing 1 1/4" dia. hole, 4 holes	2	4300001
5	Chain #60 x 83 links & connecting link	1	662071
6	Sprocket # 60 A 32 hole 1 1/4" dia.	2	654167
7	Idler sprocket CA60	1	654010
8	Hex. bolt 3/8" NC x 1 1/4"	10	O/L
9	Lockwasher 3/8"	10	O/L
10	Hex. nut. 3/8" NC	10	O/L
11	Hex. bolt 1/2" NC x 1 1/2"	8	O/L
12	Lockwasher 1/2"	8	O/L
13	Hex. nut 1/2" NC	8	O/L
14	Carriage bolt 5/8" NC x 2 1/2"	1	O/L
15	Flatwasher 11/16" dia. hole	2	O/L
16	Hex. nut 5/8" NC, nylon	1	O/L
17	Hex. bolt 3/8" NC x 1"	3	O/L
18	Hex. nut 3/8" NC, nylon	3	O/L

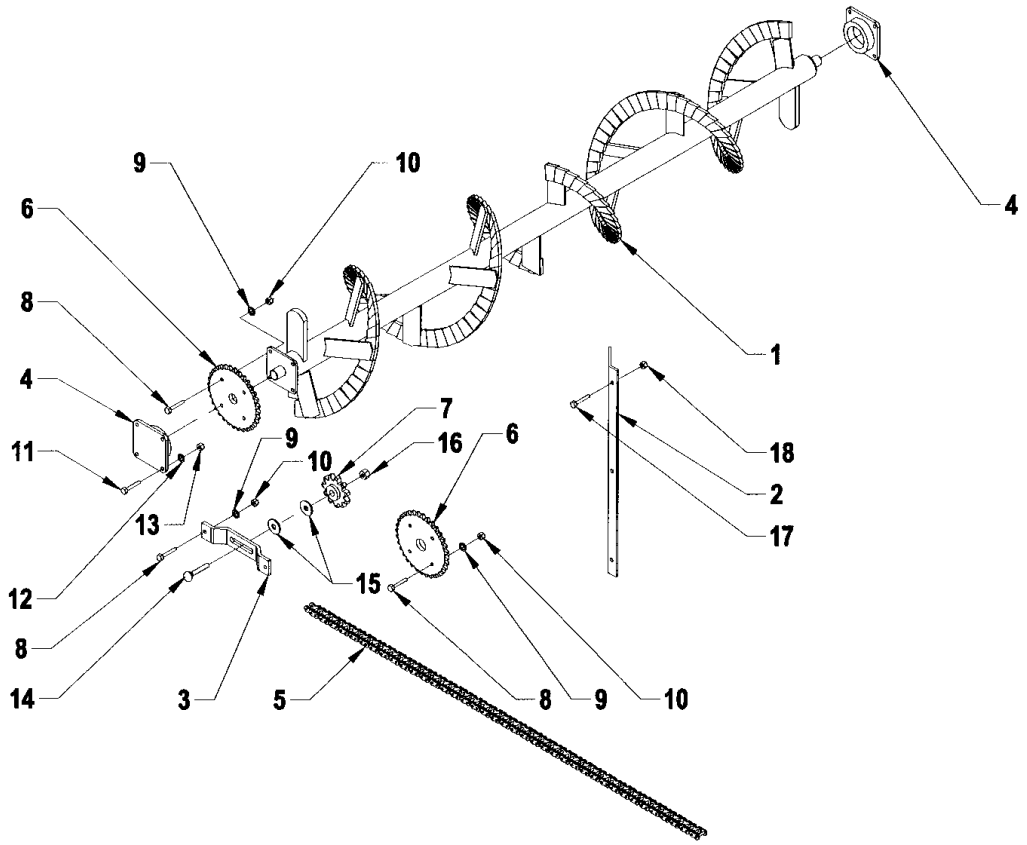

GEARBOX - 662195

REF.	DESCRIPTION	QTY.	PART NUMBER
1	Casing	1	656640
2	Oil seal (35 x 72 x 10)	1	656650
3	Snap ring	1	656652
4	Shim	2	656649
5	Bearing	1	656653
6	Sleeve	1	656648
7	Snap ring	1	656654
8	Bearing	1	656647
9	Shaft	1	656651
10	Gear	1	656645
11	Snap ring	1	656646
12	Bearing	2	656641
13	Shim	1	656644
14	Snap ring	2	656642
15	Oil seal (40 x 80 x 12)	2	656643
16	Shaft	1	662212
17	Gear	1	656657
18	Shim	1	656655
19	Filter plug	1	656662
20	Cover	1	656660
21	Hex.bolt (M10 x 14)	4	656659
22	Plug 3/8" NPT	2	655259

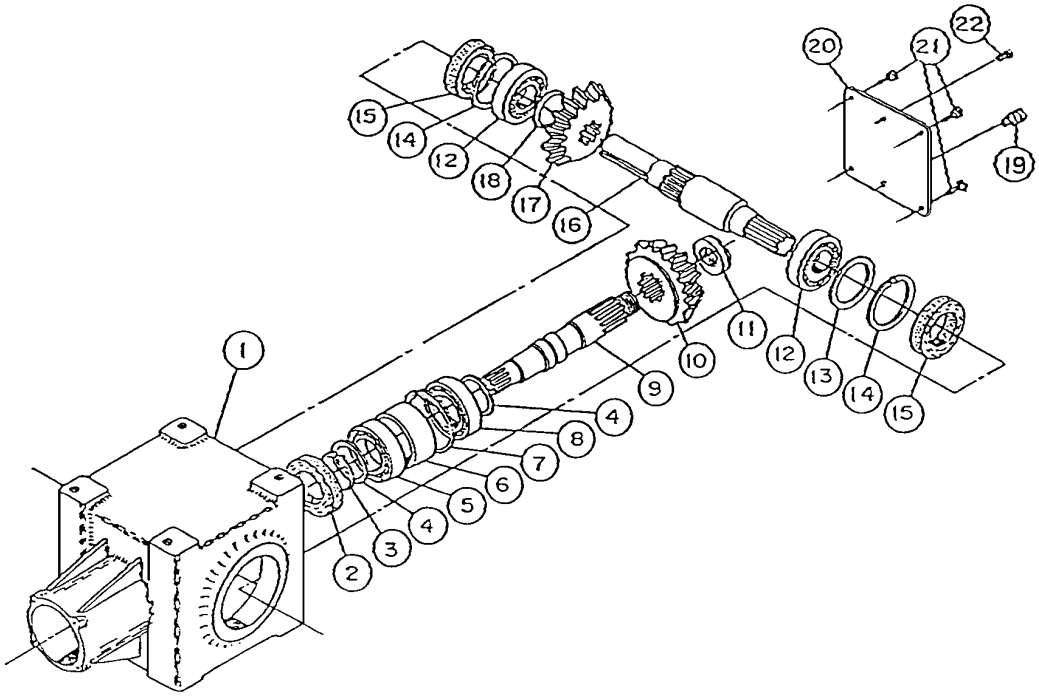

REDUCTION BOX - 8096

REF.	DESCRIPTION	QTY.	PART NUMBER
1	Bearing 6232	2	665115
2	Seal cover	1	665116
3	Sprocket 80-3 A26	1	665117
4	Chain 80-3 x 36"	1	665118
5	Bearing 6309	2	665119
6	Pinion 80-3 A14	1	665120
7	Double lip seal	1	665121
8	O-ring	2	665122
9	Double lip seal	2	665123
10	Reduction box support	1	664835
11	Hex. bolt 1/2" NC x 1 1/4"	8	O/L
12	Lockwasher 1/2"	8	O/L
13	Hex. nut 1/2" NC	4	O/L

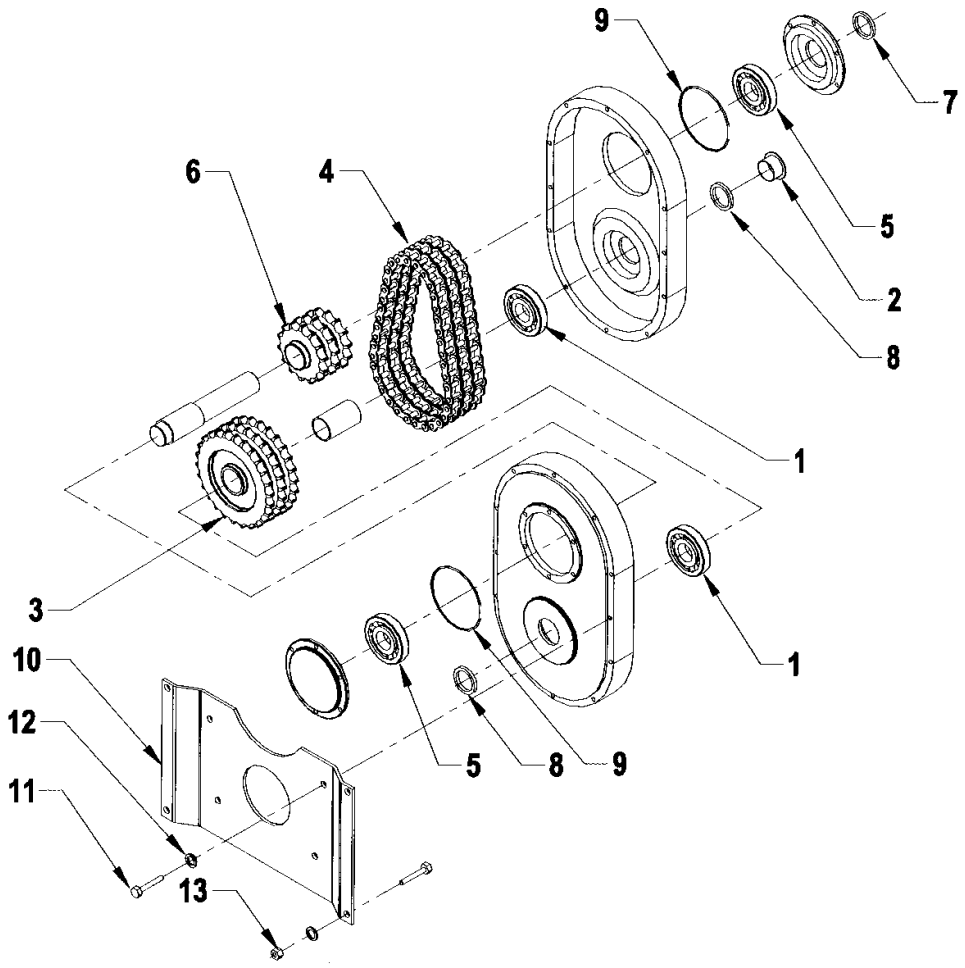

DRIVELINE - 662538

REF.	DESCRIPTION	QTY.	PART NUMBER
1	Push pin yoke assembly	1	663133
2	Universal joint kit	2	663134
3	Outer yoke	1	663136
4	Outer tube	1	663140
5	Inner tube	1	663142
6	Inner yoke	1	663144
7	Yoke and hub assembly	1	663145
8	Bolt and nut	2	662199
9	Grease fitting	1	663148
10	Ball	24	663162
11	Shear bolt and nut	1	663149
12	Shields with safety chain	1	663150
13	Safety pin	1	663151

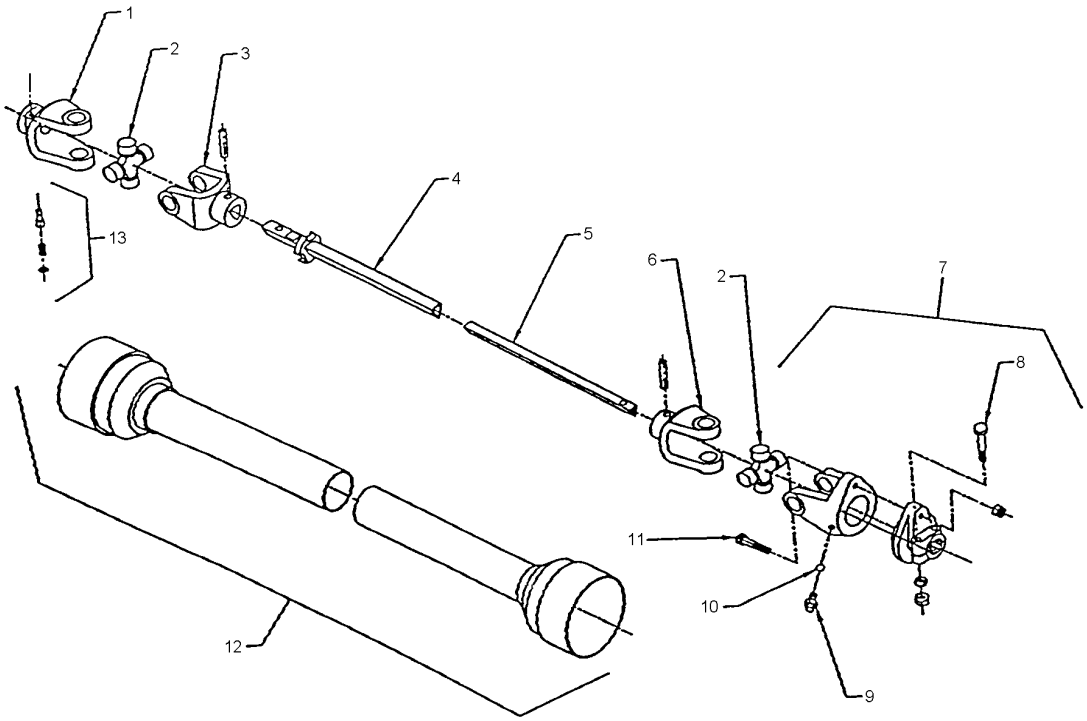

HEAVY DUTY DRIVELINE - 8030

REF.	DESCRIPTION	QTY.	PART NUMBER
1	Push pin yoke assembly	1	662289
2	Universal joint kit	2	662023
3	Outer yoke	1	663152
4	Outer tube	1	664571
5	Inner tube	1	663156
6	Inner yoke	1	663158
7	Yoke and hub assembly	1	664573
8	Bolt and nut	2	664569
9	Grease fitting	1	663161
10	Ball	24	663162
11	Shear bolt and nut	1	664570
12	Shield with safety chain	1	664567
13	Safety pin	1	664568

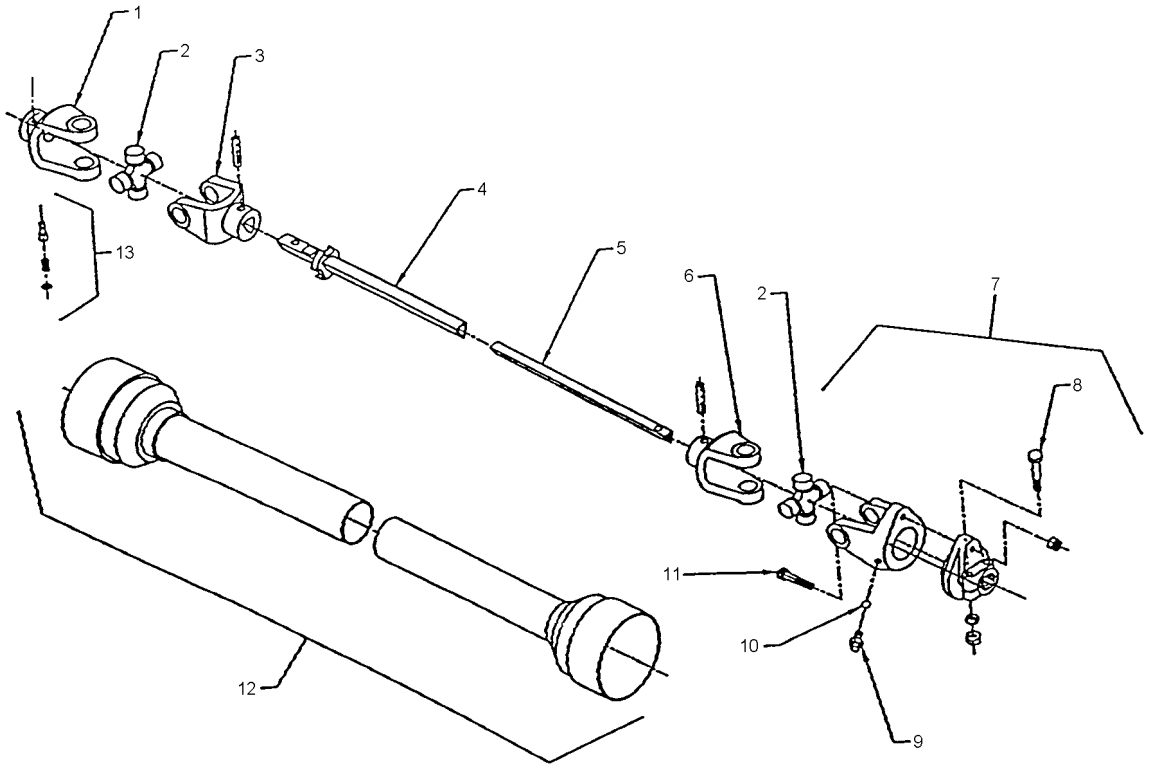

WARRANTY

RAD TECHNOLOGIES INC.

RAD TECHNOLOGIES INC. warrants to the original buyer that the equipment is free from defects in material and workmanship. RAD TECHNOLOGIES INC.'s obligation, under this warranty, will be limited to the repair or replacement of any non-wear part or component, which RAD TECHNOLOGIES INC. finds to be defective within **one year** from the date of original purchase (unless otherwise-specified). The applicable warranty period for commercial or rental use shall be ninety (90) days from the date of purchase

In no event shall RAD TECHNOLOGIES INC. be liable for consequential, special, direct or indirect damages incurred by the buyer/user.

All components not manufactured by RAD TECHNOLOGIES INC. (such as motors, actuators, hydraulic components, tires, ...etc.) are covered by the original manufacturer's warranty in conjunction with RAD TECHNOLOGIES INC..

RAD's obligation under this warranty shall be limited to repairing or replacing, free of charge to the original purchaser, any part that, in RAD's judgment, shall show evidence of such defect, provided the **distributor** returns the part prepaid within thirty (30) days from date of failure.

This warranty shall not be interpreted to render RAD TECHNOLOGIES INC. liable for injuries or damages of any kind or nature to person or property. This warranty does not extend to losses because of delays, or to any expenses or losses incurred for labor, substitute machinery, rental or for any other reason.

Except as set forth above, RAD TECHNOLOGIES INC. shall have no obligation or liability of any kind on account of any of its equipment and shall not be liable for special or consequential damages. RAD TECHNOLOGIES INC. makes no other warranty, expressed or implied, and specifically, RAD TECHNOLOGIES INC. disclaims any implied warranty or merchantability or fitness for a particular purpose**. Some states or provinces do not permit limitations or exclusions of implied warranties or incidental or consequential damages, so the limitations or exclusions in this warranty may not apply.**

This warranty is subject to any existing conditions of supply, which may directly affect our ability to obtain materials or manufacture replacement parts. RAD TECHNOLOGIES INC. reserves the right to make improvements in design or changes in specifications at any time, without incurring any obligation to owners of units previously sold.

No one is authorized to alter, modify or enlarge this warranty nor the exclusions, limitations and reservations.

2835 Chemin de l'Aéroport, Thetford Mines (Québec) G6G 5R7
Tél.: (418) 338-4499 Fax: (418) 388-6090
Internet: www.radinter.com EMAIL: radtech@radinter.com

TORQUE SPECIFICATION TABLE

GENERAL SPECIFICATION TABLE
Use the following torques when special torques are not given
NOTE: These values apply to fasteners as received from supplier, dry, or when lubricated with normal engine oil. They do not apply if special graphited or moly sidulphide greases or other extreme pressure lubricants are used. This applies to both UNF and UNC threads.

SEE Grade No.		2				5				8			
BOLT HEAD IDENTIFICATION MARKS AS PER GRADE NOTE: MANUFACTURING MARKS WILL VARY.													
		Torque				Torque				Torque			
BOLT SIZES		Pounds-Foot		Newtons-Meter		Pounds-Foot		Newtons-Meter		Pounds-Foot		Newtons-Meter	
Inches	Millimeters	MIN.	MAX.	MIN.	MAX.	MIN.	MAX.	MIN.	MAX.	MIN.	MAX.	MIN.	MAX.
1/4	6.35	5	6	6.8	8.13	9	11.0	12.2	14.9	12	15	16.3	30.3
5/16	7.94	10	12	13.6	16.3	17	20.5	23.1	27.8	24	29	32.5	39.3
3/8	9.53	20	23	27.1	31.2	35	42.0	47.5	57.0	45	54	61.0	73.2
7/16	11.11	25	30	40.7	47.4	54	64.0	73.2	86.8	70	84	94.9	113.9
1/2	12.70	45	52	61.0	70.5	80	96.0	108.5	130.2	110	132	149.2	179.0
9/16	14.29	65	75	88.1	101.6	110	132.0	149.2	179.0	160	192	217.0	260.4
5/8	15.88	95	105	128.7	142.3	150	180	203.4	244.1	220	264	298.3	358.0
3/4	19.05	150	185	203.3	250.7	270	324	366.1	439.3	380	456	515.3	618.3
7/8	22.23	160	200	216.8	271.0	400	480	542.4	650.9	600	720	813.6	976.3
1	25.40	250	300	338.8	406.5	580	696	786.5	943.8	900	1080	1220.4	1464.5
1 1/8	25.58	-	-	-	-	800	880	1084.8	1193.3	1280	1440	1735.7	1952.6
1 1/4	31.75	-	-	-	-	1120	1240	1518.7	1681.4	1820	2000	2467.9	2712.0
1 3/8	34.93	-	-	-	-	1460	1680	1979.8	2278.1	2380	2720	3227.3	3688.3
1 1/2	38.10	-	-	-	-	1940	2200	2630.6	2983.2	3160	3560	4285.0	4827.4

METRIC BOLT TORQUE SPECIFICATIONS

		Coarse thread					Fine Thread				
Size of screw	Grade No.	Pitch (mm)	Pounds-Foot		Newtons-Meter		Pitch (mm)	Pounds-Foot		Newtons-Meter	
			MIN.	MAX.	MIN.	MAX.		MIN.	MAX.	MIN.	MAX.
M6	4T (4)	1.0	3.6	5.8	4.9	7.9	-	-	-	-	-
	7T (7)		5.8	9.4	7.9	12.7		-	-	-	-
	8T (8) (11)		7.2	10	9.8	13.6		-	-	-	-
M8	4T	1.25	7.2	14	9.8	19.0	1.0	12	17	16.3	23.0
	7T		17	22	23	29.8		19	27	25.7	36.6
	8T		20	26	27.1	35.2		22	31	29.8	42
M10	4T	1.5	20	25	27.1	33.9	1.25	20	29	27.1	39.3
	7T		34	40	46.1	54.2		35	47	47.4	63.7
	8T		38	46	51.5	62.3		40	52	54.2	70.5
M12	4T	1.75	28	34	37.9	46.1	1.25	31	41	42	55.6
	7T		51	59	69.1	79.9		56	68	75.9	92.1
	8T		57	66	77.2	89.4		62	75	84	101.6
M14	4T	2.0	49	56	66.4	75.9	1.5	52	64	70.5	86.7
	7T		81	93	109.8	126		90	106	122	143.6
	8T		96	109	130.1	147.7		107	124	145	168
M16	4T	2.0	67	77	90.8	104.3	1.5	69	83	93.5	112.5
	7T		116	130	157.2	176.2		120	138	162.6	187
	8T		129	145	174.8	196.5		140	158	189.7	214.1
M18	4T	2.0	88	100	119.2	136	1.5	100	117	136	158.5
	7T		150	168	203.3	227.6		177	199	239.8	269.6
	8T		175	194	237.1	262.9		202	231	273.7	313
M20	4T	2.5	108	130	146.3	176.2	1.5	132	150	178.9	203.3
	7T		186	205	252	277.8		206	242	279.1	327.9
	8T		213	249	288.6	337.4		246	289	333.3	391.6

Manufactured by:

RAD Technologies Inc.
2835, Chemin de l'Aéroport
Thetford Mines, Québec, Canada, G6G 5R7
Tel.: (418) 338-4499 - Fax.: (418) 338-6090
E-mail : radtech@radinter.com
Internet : www.radinter.com

Printed in Canada